2021 Product Reference Guide & Price List

EFFECTIVE APRIL 1, 2021

CHANNEL®

FOODSERVICE & MATERIAL HANDLING EQUIPMENT

Contents

Accessories . . . . . 1, 25 & 28
Boat Racks 17
Bun Pan Racks – Channel Slide 3
Bun Pan Racks – Economy 1
Bun Pan Racks – Enclosed 4
Bun Pan Racks – Half Height 6
Bun Pan Racks – Heavy Duty 3
Bun Pan Racks – Knock Down 2
Bun Pan Racks – Nesting 4
Bun Pan Racks – Oven 5
Bun Pan Racks – Reach-In 7
Bun Pan Racks – Refrigeration 7
Bun Pan Racks – Semi Enclosed. . . .4
Bun Pan Racks – Stainless Steel. . . .1
Bun Pan Racks – Standard 1
Bun Pan Racks – Walk-in 2
Bun Pan Racks – Wire 2
Bun Pan Racks – Work Tops 6
Bun Pans 27
Bussing Carts 14
Cafeteria Tray Racks. . . . . 24 & 25
Can Racks. 9
Casters, Wheels 28
Convection Oven Stand 26
Cooling Shelving Rack 10
Covers – Bun Pan Racks. 28
Display Racks 18
Dollies 23
Donut Racks 21
Dunnage Racks 11
Dunnage Shelving 12
Enclosed Cabinets 4
Fry Basket Racks 14
Glass Racks 26
Hand Trucks 16
In-Flight Shelf Truck 26
Ingredient Bins 15
Keg Storage 8
Lug Racks. 18
Lugs. 27
Mobile Work Tables 6
Oval Tray Racks 26
Oven Racks. 5
Pizza Dough Boxes. 14
Pizza Dough Box Racks. 15
Pizza Racks. 14
Platform Trucks 16
Platter Racks. 19
Platters. 27
Poly Box Racks 15
Poly Carts 15
Produce Racks/Cart 17
Queen Mary. 22
Shelving – Adjustable. 13
Shelving – Cantilevered. 13
Shelving Dunnage 12
Shelving – Keg 8
Shelving – Microwave. 10
Shelving – Wall 10
Shelving – Wine. 10
Social Distancing Dividers. 17
Steamtable Pan Racks 20
Stocking Trucks 16
Tables – Polytop 17
Transport Trucks 22
Tray Delivery Racks 24
Tray Drying Racks . . . . . 22 & 26
U-Boats 16
Universal Racks. 21
Utility / Bussing Carts 22
Utility / Tray Delivery Trucks 22
Wall Mounted Sheet Pan Racks. . . . 10
Wine Storage. 10

Most Channel Mfg. food service products are listed by the National Sanitation Foundation. For specific items, please check the latest NSF Food Service Listing.

Prices in this catalog reflect list pricing and are subject to change. All up-to-date Channel Mfg. pricing is available on AutoQuotes.

Reference KCL for CAD and Revit drawings for all Channel Mfg. items. Additional drawings in Revit available upon request.

Channel Manufacturing is a proud supporter, member and sponsor of FCSI.

Catalog Print Date: April 1, 2021
© Copyright 2021 Channel Manufacturing, Inc.

Port Washington, NY 11050
Medley, FL 33178
Tel: 866-712-7283 • Fax: 516-944-0625
channelmfg.com • Email: sales@channelmfg.com

Custom Sizes Available

Bun Pan Racks

401A

401S

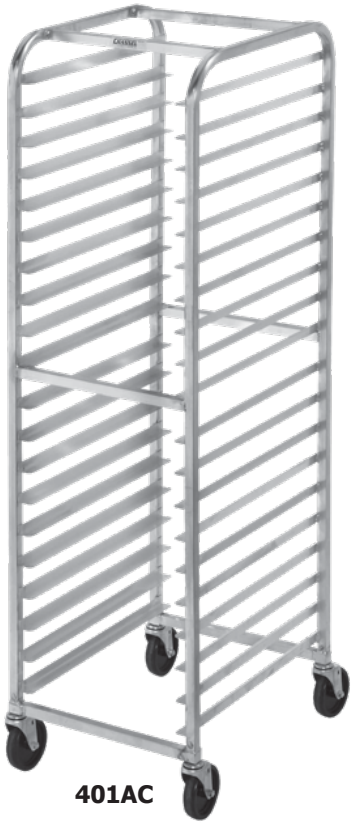

401AC

BUN PAN RACKS – ALL WELDED				STANDARD SERIES ALUMINUM CONSTRUCTION			STAINLESS SERIES STAINLESS STEEL CONSTRUCTION			ECONOMY SERIES ALUMINUM CONSTRUCTION		
Spacing/Capacity	H	W	D	MODEL	WT	PRICE	MODEL	WT	PRICE	MODEL	WT	PRICE
EL 1½" / 40	70¼"	20½"	26"	**399A**	53	$1,036						
EL 2" / 30	70¼"	20½"	26"	**400A**	45	$939	**400S**	75	$1,796	**400AC**	40	$688
EL 3" / 20	70¼"	20½"	26"	**401A**	38	$688	**401S**	57	$1,277	**401AC**	34	$475
EL 4" / 15	70¼"	20½"	26"	**402A**	32	$685	**402S**	47	$1,288			
EL 5" / 12	70¼"	20½"	26"	**403A**	30	$628	**403S**	41	$1,179			
EL 6" / 10	70¼"	20½"	26"	**404A**	28	$594	**404S**	35	$1,113			
EL 2" / 27	64"	20½"	26"	**405A**	43	$917	**405S**	70	$1,655	**405AC**	37	$676
EL 3" / 18	64"	20½"	26"	**406A**	35	$685	**406S**	53	$1,200	**406AC**	32	$458
SL 2" / 30	70¼"	28½"	18"	**410A**	43	$939	**410S**	70	$1,796	**410AC**	38	$688
SL 3" / 20	70¼"	28½"	18"	**411A**	33	$720	**411S**	55	$1,309	**411AC**	30	$534
SL 4" / 15	70¼"	28½"	18"	**412A**	30	$685	**412S**	44	$1,299			
SL 5" / 12	70¼"	28½"	18"	**413A**	28	$617	**413S**	38	$1,200			
SL 6" / 10	70¼"	28½"	18"	**414A**	26	$595	**414S**	33	$1,118			
SL 2" / 27	64"	28½"	18"	**415A**	40	$916	**415S**	65	$1,720	**415AC**	35	$676
SL 3" / 18	64"	28½"	18"	**416A**	35	$628	**416S**	50	$1,250	**416AC**	30	$512

AVAILABLE OPTIONS / UPGRADES (visit channelmfg.com or AutoQuotes for complete list)

/009 - Pan Stop - Aluminum	$50
/010 - Pan Stop - Stainless Steel	$66
/011 - Caster Brakes (2)	$32
/015 - Pan Stop - Web-Strap	$59
/022 - Corner Bumpers (2)	$59
/024 - Corner Bumpers (4)	$106
/052 - Caster Upgrade, Heavy Duty	$141
/5B - Caster Brakes, Heavy Duty (2)	$48
/2W - Double Welded Runners	$185
/A - Work Top - Aluminum	$230
/AF - Adjustable Feet (4)	$63
/BA - Solid Bottom - Aluminum	$246
/BS - Solid Bottom - Stainless	$300
/FF - Steel Flanged Feet (4)	$44
/H24 - Dunnage Dolly Handle	$70
/P - Work Top - Poly	$252
/PB - Perimeter Bumpers (4)	$216
/PH-10 - Pull Handle	$42
/PP - Prison Package	$36
/S - Work Top - Stainless Steel	$285
/SW - Seal Weld	$53
/VB - Vertical Bumpers (4)	$193

Holds standard 18" x 26" bun pans, 18" x 13" trays (2 per shelf, end loading racks only) and 17" x 25" fryer screens. Available in double sections.

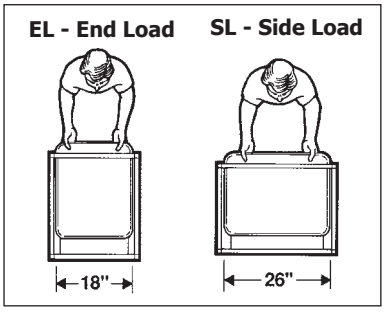

Bun Pan Racks

BUN PAN RACKS – KNOCK DOWN				KNOCK DOWN SERIES ALUMINUM CONSTRUCTION			HD KNOCK DOWN SERIES ALUMINUM CONSTRUCTION		
Spacing/Capacity	H	W	D	MODEL	WT	PRICE	MODEL	WT	PRICE
EL 3" / 20	70¼"	20½"	26"	**401AKD**	33	$251	**HDKD20**	38	$344
EL 4" / 15	70¼"	20½"	26"	**402AKD**	29	$344			
EL 5" / 12	70¼"	20½"	26"	**403AKD**	26	$343			
EL 3" / 18	63"	20½"	26"	**406AKD**	31	$342			
SL 3" / 20	70¼"	28½"	18"	**411AKD**	29	$342			
EL 3" / 9	36"	20½"	26"	**425AKD**	22	$198			
EL 4" / 7	36"	20½"	26"	**426AKD**	21	$258			

1½" pan slides will accommodate 18" x 26" pans.

401AKD

HDKD20

425AKD

560N

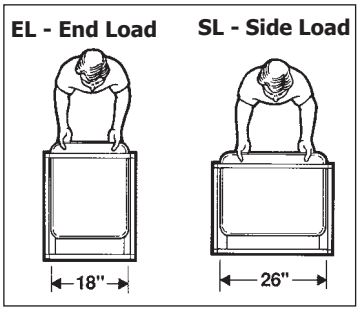

BUN PAN RACKS – WIRE PAN SLIDE				STANDARD SERIES ALUMINUM CONSTRUCTION			STAINLESS SERIES STAINLESS STEEL CONSTRUCTION		
Spacing/Capacity	H	W	D	MODEL	WT	PRICE	MODEL	WT	PRICE
EL 1½" / 36	68½"	20½"	25"	**560N**	70	$776	**560NS**	81	$1,274
EL 1½" / 33	63½"	20½"	25"	**566N**	65	$763	**566NS**	72	$1,157
EL 1½" / 18	38½"	20½"	25"	**564N**	40	$663	**564NS**	46	$1,020

BUN PAN RACKS – WALK-IN				STANDARD SERIES ALUMINUM CONSTRUCTION			STAINLESS SERIES STAINLESS STEEL CONSTRUCTION		
Spacing/Capacity	H	W	D	MODEL	WT	PRICE	MODEL	WT	PRICE
EL 2" / 27	64"	20½"	26"	**WA02**	43	$917	**WS02**	70	$1,655
EL 3" / 18	64"	20½"	26"	**WA03**	35	$685	**WS03**	53	$1,200
EL 4" / 13	64"	20½"	26"	**WA04**	31	$673	**WS04**	44	$1,236
EL 5" / 11	64"	20½"	26"	**WA05**	29	$633	**WS05**	40	$1,146

WA03

Bun Pan Racks

Custom Sizes Available

CHANNEL SLIDE – STANDARD SERIES
ALUMINUM CONSTRUCTION

MODEL	Spacing/Capacity	H	W	D	WT	PRICE
570AC	**EL 1½" / 39**	70"	21½"	26"	43	$757
571AC	**SL 1½" / 39**	70"	29½"	18"	40	$783
570AC6	**EL 1½" / 36**	64"	21½"	26"	41	$688
571AC6	**SL 1½" / 36**	64"	29½"	18"	38	$717

CHANNEL SLIDE – HEAVY-DUTY SERIES
ALUMINUM CONSTRUCTION

MODEL	Spacing/Capacity	H	W	D	WT	PRICE
AXD570	**EL 1½" / 39**	70"	22"	26"	58	$1,275
AXD5706	**EL 1½" / 35**	64"	22"	26"	54	$1,234
AXD5703	**EL 1½" / 18**	36"	22"	26"	34	$947

571AC
Side Load

570AC
End Load

LIFETIME TOUGH

IDEAL FOR CORRECTION FACILITY USE

AXD570

AXD1820

Angle Slides Hold Pans Securely On Bottom

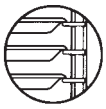

Wire Slides Hold Pans Securely By The Lip

For further details, see complete specifications at channelmfg.com or AutoQuotes.

BUN PAN RACKS – LIFETIME SERIES
ALUMINUM CONSTRUCTION

END LOAD	SIDE LOAD*	Spacing / Capacity	H	W	D	WT	PRICE
AXD1830	**AXD2830**	2" / 30	70"	22"	26"	60	$1,572
AXD1820	**AXD2820**	3" / 20	70"	22"	26"	50	$1,338
AXD1815	**AXD2815**	4" / 15	70"	22"	26"	45	$1,262
AXD1812	**AXD2812**	5" / 12	70"	22"	26"	42	$1,171
AXD1810	**AXD2810**	6" / 10	70"	22"	26"	40	$1,125
AXD1808	**AXD2808**	8" / 8	70"	22"	26"	38	$1,015
AXD1818	**AXD2818**	3" / 18	64"	22"	26"	58	$1,309
AXD1825	**AXD2825**	3" / 9	36"	22"	26"	35	$849

*Side Load models are 29"W x 18"D

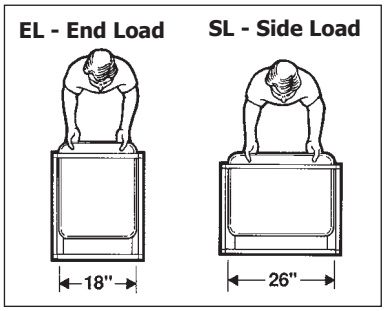

Bun Pan Racks

LIFETIME TOUGH

401AN

401AN-HD

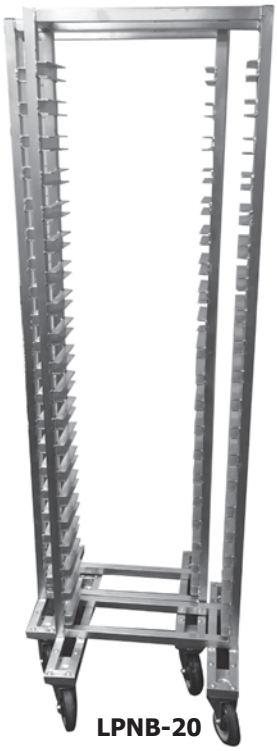

LPNB-20

Custom Sizes Available

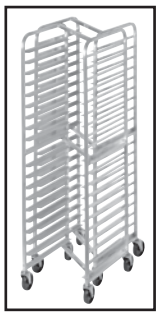

Racks nest to save valuable floor space when not in use.

BUN PAN RACKS – NESTING				STANDARD SERIES ALUMINUM CONSTRUCTION			STAINLESS SERIES STAINLESS STEEL CONST.			HEAVY-DUTY SERIES * ALUMINUM CONSTRUCTION			LO PROFILE SERIES ALUMINUM CONSTRUCTION		
Spacing/Capacity	H	W *	D	MODEL	WT	PRICE	MODEL	WT	PRICE	MODEL *	WT	PRICE	MODEL	WT	PRICE
EL 2" / 30	70¼"	20½"	26"							400AN-HD	58	$1,485			
EL 3" / 20	70¼"	20½"	26"	401AN	36	$563	401SN	55	$1,299	401AN-HD	52	$1,135	LPNB-20	32	$572
EL 4" / 15	70¼"	20½"	26"	402AN	31	$522	402SN	45	$1,309	402AN-HD	46	$1,091	LPNB-15	30	$540
EL 5" / 12	70¼"	20½"	26"	403AN	29	$474	403SN	39	$1,200	403AN-HD	43	$1,031	LPNB-12	28	$507
EL 6" / 10	70¼"	20½"	26"	404AN	27	$436	404SN	33	$1,135	404AN-HD	40	$993	LPNB-10	26	$475
EL 2" / 27	64"	20½"	26"	405AN	42	$737				405AN-HD	56	$1,473			
EL 3" / 18	64"	20½"	26"	406AN	34	$545	406SN	52	$1,222	406AN-HD	48	$1,125	LPNB-18	31	$567
EL 3" / 9	36"	20½"	26"	425AN	24	$425	425SN	40	$709	425AN-HD	45	$868			
EL 4" / 7	36"	20½"	26"	426AN	22	$424	426SN	37	$696	426AN-HD	38	$827			

*Heavy-Duty Series width is 21"

53C

56C

620

ENCLOSED BUN PAN RACKS ALUMINUM CONSTRUCTION						
Model	Spacing/Capacity	H	W	D	WT	PRICE
53C	EL 1½" / 40	66½"	20½"	27½"	112	$1,214
56C	EL 1½" / 20	36½"	20½"	27½"	75	$1,153

SEMI-ENCLOSED BUN PAN RACKS ALUMINUM CONSTRUCTION						
Model	Spacing/Capacity	H	W	D	WT	PRICE
620	EL 1½" / 40	70"	21"	26"	60	$1,179
616	EL 1½" / 38	64"	21"	26"	50	$1,135
615	EL 1½" / 16	33"	21"	26"	33	$753

615

53C and 56C are equipped with a right mounted, stainless steel hinge and a side door latch designed to hold door open 270° degrees.

Oven Racks

Channel's base oven rack model numbers exclude lifting devices and pan stops. Channel will provide Oven Rack CAD drawings for approval.

EL - End Load

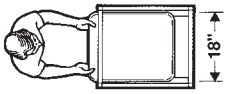

SL - Side Load

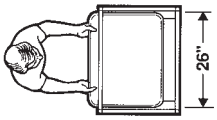

Double Section Racks hold two trays on each set of tray slides.

OVEN RACKS				STANDARD SERIES ALUMINUM CONSTRUCTION			STAINLESS SERIES STAINLESS STEEL CONSTRUCTION		
Spacing/ Capacity	H	W	D	MODEL	WT	PRICE	MODEL	WT	PRICE
SINGLE SECTION									
EL 2" / 30	69¾"	20½"	26"	**400A-OR-__**	47	$1,070	**400S-OR-__**	77	$1,922
EL 3" / 20	69¾"	20½"	26"	**401A-OR-__**	38	$803	**401S-OR-__**	68	$1,591
EL 4" / 15	69¾"	20½"	26"	**402A-OR-__**	34	$785	**402S-OR-__**	64	$1,398
EL 5" / 12	69¾"	20½"	26"	**403A-OR-__**	31	$775	**403S-OR-__**	61	$1,335
EL 6" / 10	69¾"	20½"	26"	**404A-OR-__**	29	$742	**404S-OR-__**	59	$1,200
SL 2" / 30	69¾"	28½"	18"	**410A-OR-__**	40	$1,070	**410S-OR-__**	72	$1,922
SL 3" / 20	69¾"	28½"	18"	**411A-OR-__**	34	$801	**411S-OR-__**	66	$1,582
SL 4" / 15	69¾"	28½"	18"	**412A-OR-__**	31	$789	**412S-OR-__**	63	$1,407
SL 5" / 12	69¾"	28½"	18"	**413A-OR-__**	29	$775	**413S-OR-__**	60	$1,274
SL 6" / 10	69¾"	28½"	18"	**414A-OR-__**	27	$742	**414S-OR-__**	54	$1,200
DOUBLE SECTION									
SL 2" / 60	69¾"	29"	36"	**410A-DOR-__**	77	$1,625	**410S-DOR-__**	158	$2,926
SL 3" / 40	69¾"	29"	36"	**411A-DOR-__**	67	$1,324	**411S-DOR-__**	122	$2,245
SL 4" / 30	69¾"	29"	36"	**412A-DOR-__**	31	$1,200	**412S-DOR-__**	104	$1,935
SL 5" / 24	69¾"	29"	36"	**413A-DOR-__**	45	$1,125	**413S-DOR-__**	93	$1,702
SL 6" / 20	69¾"	29"	36"	**414A-DOR-__**	39	$1,031	**414S-DOR-__**	86	$1,555

Channel oven racks are equipped with 4" phenolic, extra-high temperature wheels with zerk grease fittings, 475°F continuous use, 575°F intermittent use. Use in Blast Chillers for freezing to -45°F.

For further details, see complete specifications at channelmfg.com or AutoQuotes.

LIFTER OPTIONS

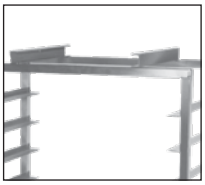

/B Lift $97

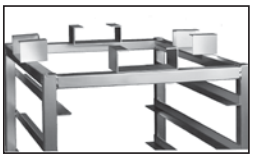

/C Lift $97

Specify:

- 2 or 4 Lifters
- End and/or Side Placement

END LOAD

SIDE LOAD

DOUBLE SECTION SIDE LOAD

Mobile Work Tables / Under-Counter / Half Height

425A

425A/P
Shown with
Optional Poly Top

425AKD

RG101

UNDER-COUNTER/ HALF HEIGHT				STANDARD SERIES ALUMINUM CONSTRUCTION			STAINLESS SERIES STAINLESS STEEL CONST.			KNOCK DOWN SERIES ALUMINUM CONSTRUCTION			HEAVY-DUTY SERIES ALUMINUM CONSTRUCTION			OUTRIGGER SLICER STAND ALUMINUM CONST. STAINLESS TOP		
Spacing / Capacity	H	W*	D	MODEL	WT	PRICE	MODEL	WT	PRICE	MODEL	WT	PRICE	MODEL	WT	PRICE	MODEL	WT	PRICE
REGULAR 1/2 SIZE																		
EL 3" / 9	36"	20½"	26"	425A	24	$381	425S	37	$688	425AKD	22	$198	AXD1825	35	$849			
EL 4" / 7	36"	20½"	26"	426A	22	$429	426S	34	$674	426AKD	21	$258						
EL 5" / 5	34½"	20½"	26"	427A	20	$421	427S	30	$637									
SL 3" / 9	36"	28½"	18"	428A	22	$435	428S	33	$720									
SL 4" / 7	36"	28½"	18"	429A	21	$429	429S	30	$688									
UNDER-COUNTER																		
EL 3" / 8	32"	20½"	26"	430A	23	$424	430S	36	$704							RG101	36	$1,004
EL 4" / 6	32"	20½"	26"	431A	21	$413	431S	32	$654							RG102	33	$906
EL 3" / 5	23"	20½"	26"	432A	20	$403	432S	31	$631									

***Heavy-Duty Series (AXD) width is 22"W**

WORK TOP OPTIONS: **/A** Aluminum – $230 **/S** Stainless Steel – $285 **/P** Poly Top – $252

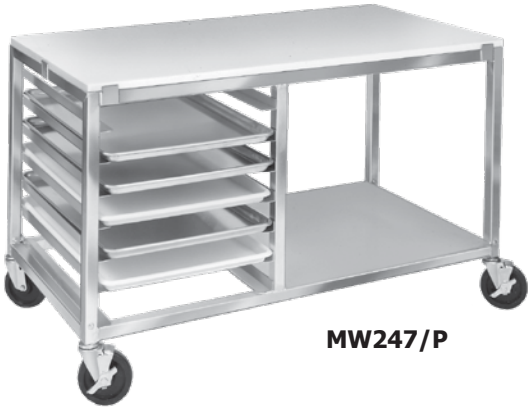

MW247/P

BPRE-5/P

DS2414/P

567/P

ANGLE PAN SLIDE ALUMINUM CONSTRUCTION w/ POLYTOP						
MODEL	Spacing/ Capacity	H	W	D	WT	PRICE
DOUBLE SECTION WITH OPEN SHELF						
MW245/P	EL5" / 4	31½"	48"	24"	59	$1,214
MW247/P	EL3" / 7	31½"	48 "	24"	64	$1,238
SINGLE SECTION						
BPRE-5/P	EL5" / 5	34½"	20½"	26"	32	$654
BPRE-6/P	EL3" / 8	34½"	20½"	26"	36	$676
DOUBLE SECTION						
DS2410/P	EL5" / 8	31"	40"	24"	59	$1,181
DS2414/P	EL3" / 14	31"	40"	24"	64	$1,212

WIRE PAN SLIDE ALUMINUM CONSTRUCTION w/ POLYTOP						
MODEL	Spacing/ Capacity	H	W	D	WT	PRICE
565/P	EL 1½"/ 30	31½"	42"	25"	86	$1,200
567/P	EL 1½"/ 15	31½"	20½"	25"	45	$773

Reach-in Refrigeration Racks

Custom Sizes Available

RIR-16

RIW-29

RIR-7

RIW-13

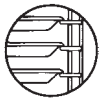

Wire Slides Hold Pans Securely From The Lip

Angle Slides Hold Pans Securely On Bottom

REACH-IN BUN PAN RACKS				STANDARD SERIES ALUMINUM CONSTRUCTION			STAINLESS SERIES STAINLESS STEEL CONST.			KNOCKDOWN SERIES ALUMINUM CONSTRUCTION		
Spacing/Capacity	H	W	D	MODEL	WT	PRICE	MODEL	WT	PRICE	MODEL	WT	PRICE
EL 3" / 7	23"	20½"	23"	RIR-7	13	$342	RIR-7S	20	$559	RIR-7KD	14	$342
EL 2" / 10	23"	20½"	23"	RIR-10	15	$393	RIR-10S	23	$688	RIR-10KD	16	$393
EL 3" / 16	51"	20½"	23"	RIR-16	23	$480	RIR-16S	35	$818	RIR-16KD	24	$480
EL 2" / 24	51"	20½"	23"	RIR-24	29	$572	RIR-24S	44	$938	RIR-24KD	30	$572
WIRE REACH-IN BUN PAN RACKS												
EL 1½" / 13	23"	20½"	25"	RIW-13	27	$342	RIW-13S	32	$490			
EL 1½" / 29	51"	20½"	25"	RIW-29	65	$545	RIW-29S	72	$698			

For further details, see complete specifications at channelmfg.com or AutoQuotes.

RIUTR-7

RIUTR-16

REACH-IN BUN PAN / STEAM TABLE PAN RACK ALUMINUM CONSTRUCTION					
MODEL	SPACING / CAPACITY	H	W	D	PRICE
RIUTR-7	EL 3" / 7	23"	20½"	23"	$563
RIUTR-4	EL 5" / 4	23"	20½"	23"	$524
RIUTR-16	EL 3" / 16	51"	20½"	23"	$698
RIUTR-10	EL 5" / 10	51"	20½"	23"	$654

Half Size Pan Rack

HALF SIZED BUN PAN RACKS ALUMINUM CONSTRUCTION						
MODEL	**Spacing/ Capacity**	**H**	**W**	**D**	**WT**	**PRICE**
STANDARD CONSTRUCTION						
HT307	**3" / 7**	30"	15½"	18"	15	$342
TT307*	**3" / 7**	24"	15½"	18"	12	$313
HT315	**3" / 15**	54"	15½"	18"	21	$454
NESTING CONSTRUCTION						
HT307N	**3" / 7**	30"	15½"	18"	15	$371
HT315N	**3" / 15**	54"	15½"	18"	21	$480

* tabletop, no casters.

HT307
Shown with
Optional Poly Top **/P**

HT307N

AWM-6

WALL MOUNTED SHEET PAN RACK ALUMINUM CONSTRUCTION							
Model	**Spacing/Capacity**	**Tray Size**	**H**	**W**	**D**	**WT**	**PRICE**
HALF-SIZE PANS							
AWM-5	SL 3" / 5	13" x 18"	17"	20½"	13"	12	$279
HALF-SIZE PANS - double section							
AWM-10	SL 3" / 10	13" x 18"	17"	40"	13"	20	$352
FULL-SIZE PANS							
AWM-6	SL 3" / 6	18" x 26"	20"	28½"	18"	15	$276

**Mounting Hardware not included.

Keg Storage

Custom Sizes Available

KEG STORAGE RACKS ALUMINUM CONSTRUCTION						
MODEL	**H**	**W**	**D**	**CAPACITY**	**WT.**	**PRICE**
KEG STORAGE RACK - ALL-WELDED						
KSR72	55"	71½"	20"	8 Kegs	50	$939
KSR48	55"	48"	20"	4 Kegs	35	$763
KEG STORAGE RACK – ADJUSTABLE INCLUDES UPRIGHTS (set of 4)						
KAR42	68″	42″	17″	4 Kegs	44	$775
KAR48	68"	48"	17"	4 Kegs	48	$840
KAR60	68"	60"	17"	6 Kegs	52	$949
KAR80	68"	80"	17"	8 Kegs	62	$1,004
KAR93*	68"	93"	17"	10 Kegs	78	$1,262

*Includes 6 uprights.

KEG DUNNAGE RACK						
KDR136	12"	36"	18"	2 Kegs	12	$216
KDR148	12"	48"	18"	3 Kegs	14	$228
KEG DOLLY						
KDA17	4"	17"	17"	1 Keg	15	$206
UPRIGHTS - FOR ADJUSTABLE KEG RACKS (set of 4)						
KARPOLE68	68"	1-5/16" DIA.			13	$139
OPTIONAL ACCESSORIES						
KEG STOPS - FOR ADJUSTABLE KEG RACKS (1ea.)						
/KS142	2″	42″	17″	4 Kegs	8	$76
/KS148	2"	48"	17"	4 Kegs	8	$79
/KS160	2"	60"	17"	6 Kegs	10	$82
/KS180	2"	80"	17"	8 Kegs	13	$101
/KS193	2"	93"	17"	10 Kegs	14	$161

KSR72

KAR60
shown w/ optional
/**KS160** Keg Stop

KDA17

KDR136

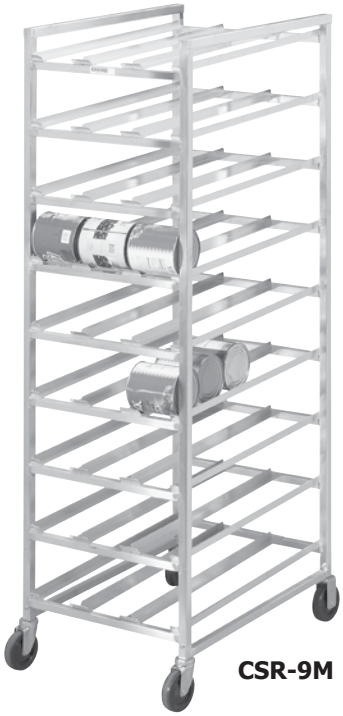

CSR-9M

CSR-99M

CSR-156

FULL SIZE CAN RACKS Capacity: 162 – #10 Cans				HEAVY-DUTY SERIES ALUMINUM CONSTRUCTION			STANDARD SERIES ALUMINUM CONSTRUCTION		
	H	W	D	MODEL	WT	PRICE	MODEL	WT	PRICE
STATIONARY	76"	25½"	35"	**CSR-99**	75	$1,157	**CSR-9**	53	$922
MOBILE	82¼"	25½"	35"	**CSR-99M**	115	$1,386	**CSR-9M**	73	$1,168

FIRST IN / FIRST OUT CAN RACKS

ALUMINUM CONSTRUCTION - Capacity: 156 – #10 Cans

MODEL		H	W	D	WT	PRICE
CSR-156	STATIONARY	82"	25⅝"	42¼"	165	$2,912
CSR-156M	MOBILE	79"	25⅝"	42¼"	185	$3,384

CSR-4M

HALF SIZE MOBILE - ALL-WELDED CAN RACKS

ALUMINUM CONSTRUCTION

Model	72 – #10 CANS	H	W	D	WT	PRICE
CSR-4M	Aluminum Top	43"	25¾"	35¼"	43	$873
CSR-44M	HD / Alum. Top	43"	25¾"	35¼"	48	$1,113
CSR-4MP	Poly Top	43"	25¾"	35¼"	57	$1,058
CSR-4MS	Stainless Steel Top	43"	25¾"	35¼"	48	$1,146
Model	**54 – #10 CANS**	**H**	**W**	**D**	**WT**	**PRICE**
CSR-3	No Top	34"	25¾"	35¼"	30	$840
CSR-3M	Aluminum Top	34"	25¾"	35¼"	39	$946
CSR-3MP	Poly Top	34"	25¾"	35¼"	53	$922
CSR-3MS	Stainless Steel Top	34"	25¾"	35¼"	44	$1,091

CAN AND STORAGE RACK

ALUMINUM CONSTRUCTION

Model	80 – #10 CANS	H	W	D	WT	PRICE
CSBR-80	STATIONARY	76"	25½"	35"	75	$993
CSBR-80M	MOBILE	82¼"	25½"	35"	115	$1,192

CSBR-80M

Perfect for storing both cans and boxes.

OPTIONS:

CSR-M	Mobile Can Rack Caster Kit, (set of 4) – $216
/011	Caster Brakes (set of 2) – $32
/052	HD 5"x2" Plate Caster Upgrade (set of 4) – $141
/5B	HD Caster Brakes (set of 2) – $48

Shelving

WALL SHELVING	TUBULAR ALUMINUM CONSTRUCTION			SOLID KNOCK DOWN ALUMINUM CONSTRUCTION			SOLID KNOCK DOWN STAINLESS CONSTRUCTION		
SIZE D-W	MODEL	WT	PRICE	MODEL	WT	PRICE	MODEL	WT	PRICE
12" x 24"	TWS1224	9	$137	AWS1224	9	$104	SWS1224	10	$170
12" x 36"	TWS1236	11	$170	AWS1236	11	$116	SWS1236	12	$174
12" x 48"	TWS1248	13	$229	AWS1248	13	$126	SWS1248	14	$206
12" x 60"	TWS1260	15	$217				SWS1260	16	$237
18" x 36"	TWS1836	16	$229						
18" x 48"	TWS1848	18	$246						
18" x 60"	TWS1860	20	$268						

MICROWAVE WALL SHELVING STAINLESS CONSTRUCTION			
MODEL	SIZE D-W	WT	PRICE
MWS1824	18" x 24"	15	$327
MWS2424	24" x 24"	20	$393

MWS1824

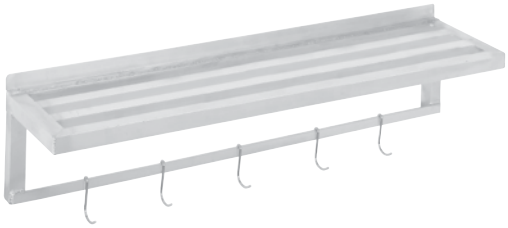

SWS1248

TWS1248/PH – Pot Hooks (5) and Bar - $291

/PH (set of 5) – $72

AWS1248

MOBILE COOLING SHELVING ALUMINUM CONSTRUCTION						
MODEL	Shelves / Capacity	H	W	D	WT	PRICE
568	7 / 9"	70½"	58½"	19"	140	$1,395
569	6 / 11"	70½"	47½"	25"	102	$1,485

Shelves are made of removable plated steel wire.

568

569

NEW ITEM

WINE STORAGE SHELVING ALUMINUM CONSTRUCTION						
MODEL	Shelves / Capacity	H	W	D	WT	PRICE
WSS-1152	11 / 110	55"	21½"	25"	150	$1,595

WSS = Category.
11 = Number of shelves.
5 = Number of bottles wide per shelf.
2 = Number of bottles deep per shelf.

Custom Sizes Made to Order

Dunnage Racks

For further details, see complete specifications at channelmfg.com or AutoQuotes.

ES2036
STAINLESS SERIES

ED2048
STANDARD SERIES

Custom Sizes Available

TUBULAR DUNNAGE RACKS

12"H Standard. Add **/8** after ED or ES model number for 8"H.

	STANDARD SERIES 2,200 lb. Capacity			STAINLESS SERIES 4,000 lb. Capacity			PROMO SERIES 2,000 lb. Capacity			KNOCK DOWN SERIES 2,200 lb. Capacity		
SIZE DxW	MODEL	WT	PRICE	MODEL	WT	PRICE	MODEL	WT	PRICE	MODEL	WT	PRICE
20" x 24"	ED2024	11	$191	ES2024	14	$447	ADE2024	8	$118	ADE2024KD	9	$125
20" x 36"	ED2036	12	$203	ES2036	16	$469	ADE2036	9	$123	ADE2036KD	11	$133
20" x 42"	ED2042	13	$216	ES2042	18	$509	ADE2042	10	$126			
20" x 48"	ED2048	14	$229	ES2048	20	$557	ADE2048	11	$128	ADE2048KD	13	$144
20" x 54"	ED2054	15	$239	ES2054	22	$600	ADE2054	12	$130			
20" x 60"	ED2060	16	$251	ES2060	24	$651	ADE2060	13	$132			
20" x 72"	ED2072*	19	$327	ES2072*	28	$709	ADE2072*	13	$147			
24" x 24"	ED2424	12	$205				ADE2424	9	$120			
24" x 36"	ED2436	13	$216				ADE2436	11	$127			
24" x 42"	ED2442	14	$228				ADE2442	13	$131			
24" x 48"	ED2448	15	$239				ADE2448	14	$139			
24" x 54"	ED2454	16	$251				ADE2454	15	$142			
24" x 60"	ED2460	17	$261				ADE2460	16	$147			
24" x 72"	ED2472*	20	$327				ADE2472*	16	$163			

*72" width Dunnage Racks include extra set of legs (center).

ADE2048
PROMO SERIES

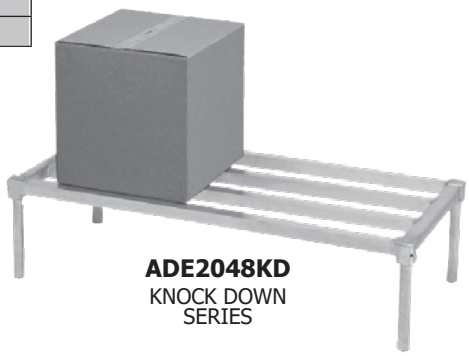

ADE2048KD
KNOCK DOWN SERIES

CA2048
STANDARD SERIES

EXD2048
LIFETIME SERIES

LIFETIME TOUGH

CORRECTION FACILITY APPROVED

C-CHANNEL DUNNAGE RACKS

12"H Standard. Add **/8** after CA or HD model number for 8"H.

	STANDARD SERIES C-Channel Style 2,500 lb. Capacity			HEAVY-DUTY SERIES 4" Wide E-Channel 3,000 lb. Capacity			PROMO SERIES C-Channel Style 2,200 lb. Capacity			LIFETIME SERIES E-Channel, Gusset Legs 3,500 lb. Capacity		
SIZE DxW	MODEL	WT	PRICE	MODEL	WT	PRICE	MODEL	WT	PRICE	MODEL	WT	PRICE
20" x 24"	CA2024	12	$180	HD2024	12	$213	ADR2024	6	$106			
20" x 36"	CA2036	13	$190	HD2036	13	$226	ADR2036	8	$119	EXD2036	14	$300
20" x 42"	CA2042	14	$198	HD2042	14	$237	ADR2042	10	$128	EXD2042	15	$306
20" x 48"	CA2048	15	$207	HD2048	15	$250	ADR2048	11	$130	EXD2048	16	$316
20" x 54"	CA2054	16	$217	HD2054	16	$261	ADR2054	13	$141	EXD2054	17	$327
20" x 60"	CA2060	17	$229	HD2060	17	$276	ADR2060	14	$143	EXD2060	18	$332
20" x 72"	CA2072*	20	$284	HD2072*	19	$391						
24" x 24"	CA2424	13	$207	HD2424	13	$227						
24" x 36"	CA2436	14	$217	HD2436	14	$237				EXD2436	15	$327
24" x 42"	CA2442	15	$231	HD2442	15	$251				EXD2442	16	$332
24" x 48"	CA2448	16	$243	HD2448	16	$263				EXD2448	17	$340
24" x 54"	CA2454	17	$256	HD2454	17	$277				EXD2454	18	$349
24" x 60"	CA2460	18	$269	HD2460	18	$292				EXD2460	19	$353
24" x 72"	CA2472*	22	$344	HD2472*	20	$403						

*72" width Dunnage Racks include extra set of legs.

HD2048
HEAVY-DUTY SERIES

ADR2048
PROMO SERIES

Dunnage Shelving - ALL-WELDED

Channel Style: 2,500 lb. distributed weight capacity.
Tubular Style: 2,200 lb. distributed weight capacity.

DUNNAGE SHELVING – 2 SHELF STYLE 52½" SPACING
ALUMINUM CONSTRUCTION

SIZE	CHANNEL STYLE			TUBULAR STYLE		
D-W-H	MODEL	WT	PRICE	MODEL	WT	PRICE
20" x 36" x 64"	**DR2036-2**	28	$415	**ED2036-2**	26	$381
20" x 42" x 64"	**DR2042-2**	30	$432	**ED2042-2**	28	$393
20" x 48" x 64"	**DR2048-2**	32	$447	**ED2048-2**	30	$403
20" x 54" x 64"	**DR2054-2**	34	$463	**ED2054-2**	32	$424
20" x 60" x 64"	**DR2060-2**	36	$481	**ED2060-2**	34	$436
20" x 72" x 64"	**DR2072-2**	44	$589			
24" x 36" x 64"	**DR2436-2**	33	$475	**ED2436-2**	31	$434
24" x 42" x 64"	**DR2442-2**	35	$498	**ED2442-2**	33	$456
24" x 48" x 64"	**DR2448-2**	38	$524	**ED2448-2**	36	$478
24" x 54" x 64"	**DR2454-2**	43	$545	**ED2454-2**	38	$502
24" x 60" x 64"	**DR2460-2**	48	$584	**ED2460-2**	41	$529
24" x 72" x 64"	**DR2472-2**	56	$688			

DUNNAGE SHELVING – 3 SHELF STYLE 26" SPACING
ALUMINUM CONSTRUCTION

SIZE	CHANNEL STYLE			TUBULAR STYLE		
D-W-H	MODEL	WT	PRICE	MODEL	WT	PRICE
20" x 36" x 64"	**DR2036-3**	34	$557	**ED2036-3**	32	$509
20" x 42" x 64"	**DR2042-3**	36	$589	**ED2042-3**	35	$524
20" x 48" x 64"	**DR2048-3**	40	$611	**ED2048-3**	38	$545
20" x 54" x 64"	**DR2054-3**	43	$650	**ED2054-3**	41	$573
20" x 60" x 64"	**DR2060-3**	46	$688	**ED2060-3**	44	$589
20" x 72" x 64"	**DR2072-3**	52	$818			
24" x 36" x 64"	**DR2436-3**	43	$650	**ED2436-3**	41	$589
24" x 42" x 64"	**DR2442-3**	47	$666	**ED2442-3**	45	$611
24" x 48" x 64"	**DR2448-3**	51	$698	**ED2448-3**	49	$639
24" x 54" x 64"	**DR2454-3**	55	$720	**ED2454-3**	53	$654
24" x 60" x 64"	**DR2460-3**	59	$797	**ED2460-3**	57	$695
24" x 72" x 64"	**DR2472-3**	67	$961			

DUNNAGE SHELVING – 4 SHELF STYLE 16½" SPACING
ALUMINUM CONSTRUCTION

SIZE	CHANNEL STYLE			TUBULAR STYLE		
D-W-H	MODEL	WT	PRICE	MODEL	WT	PRICE
20" x 36" x 64"	**DR2036-4**	39	$698	**ED2036-4**	37	$633
20" x 42" x 64"	**DR2042-4**	43	$742	**ED2042-4**	41	$654
20" x 48" x 64"	**DR2048-4**	48	$777	**ED2048-4**	46	$698
20" x 54" x 64"	**DR2054-4**	52	$814	**ED2054-4**	50	$728
20" x 60" x 64"	**DR2060-4**	56	$852	**ED2060-4**	54	$763
20" x 72" x 64"	**DR2072-4**	64	$961			
24" x 36" x 64"	**DR2436-4**	53	$836	**ED2436-4**	51	$753
24" x 42" x 64"	**DR2442-4**	59	$862	**ED2442-4**	56	$797
24" x 48" x 64"	**DR2448-4**	65	$906	**ED2448-4**	62	$837
24" x 54" x 64"	**DR2454-4**	70	$949	**ED2454-4**	67	$873
24" x 60" x 64"	**DR2460-4**	75	$995	**ED2460-4**	73	$911
24" x 72" x 64"	**DR2472-4**	86	$1,125			

OPTIONS:

/AF Adjustable Feet (set of 4) – $63
/052 Heavy-Duty 5" x 2" Plate Casters (set of 4), must be factory installed – $141
/5B Heavy-Duty Caster Brakes (set of 2), must be factory installed – $48

For further details, see complete specifications at channelmfg.com or AutoQuotes.

DR2048-2 DR2048-3

DR2048-4

ED2048-2

Custom sizes available. Call factory for information.

ED2048-4

ED2048-3

Adjustable & Cantilevered Shelving

ADJUSTABLE SHELVING ALUMINUM CONSTRUCTION

SIZE	SOLID SHELVES			4" E-CHANNEL			T-BAR			TUBULAR		
D-W	MODEL	WT	PRICE	MODEL	WT	PRICE	MODEL	WT	PRICE	MODEL	WT	PRICE
20" x 36"	**SA2036**	9	$135	**EC2036**	10	$149	**BA2036**	9	$143	**TA2036**	8	$123
20" x 42"	**SA2042**	10	$145	**EC2042**	11	$153	**BA2042**	10	$153	**TA2042**	9	$129
20" x 48"	**SA2048**	11	$152	**EC2048**	12	$163	**BA2048**	10	$164	**TA2048**	10	$137
20" x 54"	**SA2054**	12	$163	**EC2054**	13	$173	**BA2054**	11	$175	**TA2054**	11	$148
20" x 60"	**SA2060**	13	$182	**EC2060**	14	$184	**BA2060**	12	$186	**TA2060**	12	$159
24" x 36"	**SA2436**	11	$150	**EC2436**	12	$180	**BA2436**	10	$160	**TA2436**	10	$141
24" x 42"	**SA2442**	12	$159	**EC2442**	13	$190	**BA2442**	11	$171	**TA2442**	11	$146
24" x 48"	**SA2448**	13	$167	**EC2448**	14	$202	**BA2448**	12	$182	**TA2448**	12	$151
24" x 54"	**SA2454**	14	$175	**EC2454**	15	$212	**BA2454**	13	$193	**TA2454**	13	$160
24" x 60"	**SA2460**	15	$190	**EC2460**	16	$224	**BA2460**	14	$204	**TA2460**	14	$173

UPRIGHTS FOR ADJUSTABLE SHELVING (**not** included).

ASAU72 (Set of 4) – $139

OPTIONS:

- **/AF** - Adjustable Feet (4) – $63
- **/FF** - Flanged Feet (4) – $44
- **/011** - Caster Brakes (2) – $32
- **/ADJ4** - Caster conversion kit (4) $216 (must be factory installed)

CANTILEVERED SHELVING ALUMINUM CONSTRUCTION

SIZE	SOLID SHELVES			4" E-CHANNEL			T-BAR			TUBULAR		
D-W	MODEL	WT	PRICE	MODEL	WT	PRICE	MODEL	WT	PRICE	MODEL	WT	PRICE
20" x 36"	**SC2036**	11	$172	**ECC2036**	11	$170	**BC2036**	10	$159	**TT2036**	9	$140
20" x 42"	**SC2042**	13	$183	**ECC2042**	14	$181	**BC2042**	12	$170	**TT2042**	11	$150
20" x 48"	**SC2048**	15	$194	**ECC2048**	15	$191	**BC2048**	14	$181	**TT2048**	12	$161
20" x 54"	**SC2054**	17	$205	**ECC2054**	17	$203	**BC2054**	16	$191	**TT2054**	14	$172
20" x 60"	**SC2060**	19	$215	**ECC2060**	19	$213	**BC2060**	18	$203	**TT2060**	16	$183
24" x 36"	**SC2436**	13	$185	**ECC2436**	13	$184	**BC2436**	12	$174	**TT2436**	11	$152
24" x 42"	**SC2442**	16	$196	**ECC2442**	15	$195	**BC2442**	14	$185	**TT2442**	12	$163
24" x 48"	**SC2448**	18	$207	**ECC2448**	17	$216	**BC2448**	16	$196	**TT2448**	14	$174
24" x 54"	**SC2454**	20	$217	**ECC2454**	19	$228	**BC2454**	18	$207	**TT2454**	16	$185
24" x 60"	**SC2460**	22	$239	**ECC2460**	21	$238	**BC2460**	20	$217	**TT2460**	18	$196

CANTILEVERED SHELVING is adjustable in 10" increments.

Cross Supports (set of 2) (not included).

- **CSH36** - $50
- **CSH42** - $53
- **CSH48** - $55
- **CSH54** - $58
- **CSH60** - $60

Uprights, 72" high (not included).

- **CSURL - Left** - $216
- **CSURR - Right** - $216
- **CSURC - Common** - $575

Ships Knocked Down, Easy to Assemble

NEW ITEM

Cantilevered Shelving Kits include all components:
- **(4) Tubular Style Shelves**
- **(1) CSURL Upright**
- **(1) CSURR Upright**
- **(1) Set of 2 CSH## (cross supports and hardware)**

CANTILEVERED SHELVING KITS - ALL-WELDED

ALUMINUM CONSTRUCTION - TUBULAR STYLE SHELVES

MODEL	SHELVES	H	W	D	WT	PRICE
CSU-TT2036-4-KIT	4	72"	22"	36"	63	$1,042
CSU-TT2048-4-KIT	4	72"	22"	36"	63	$1,130
CSU-TT2060-4-KIT	4	72"	22"	36"	63	$1,278
CSU-TT2442-4-KIT	4	72"	25"	36"	63	$1,136
CSU-TT2448-4-KIT	4	72"	25"	36"	63	$1,184

Adjustable Shelving

NEW ITEM

Cantilevered Shelving

Pizza Equipment

PR-12
Aluminum Work Top included.

PR-26

RB-4

PIZZA PAN / DOUGH BOX RACKS
ALUMINUM CONSTRUCTION

MODEL	Spacing/ Capacity	H	W	D	WT	PRICE
PIZZA PAN 1/2 SIZE RACKS – ALUMINUM TOP TABLE						
PR-12	2" / 12	32½"	22"	20"	37	$717
PR-24	2" / 24	32½"	43"	20"	73	$1,335
PIZZA PAN 1/2 SIZE RACKS – UNDER COUNTER / NO TOP						
PR-11	2" / 11	30½"	22"	20"	35	$692
PIZZA PAN FULL SIZE RACKS						
PR-26	2" / 26	62½"	22"	20"	53	$837
PR-52	2" / 52	62½"	43"	20"	104	$1,561
PIZZA/DOUGH BOX RACKS						
RB-4	FL 4" / 15	70"	21"	26"	35	$654
RB-5	FL 5" / 12	70"	21"	26"	32	$643
RB-46	FL 4" / 13	64"	21"	26"	30	$588
PIZZA/DOUGH BOX RACK – ALUMINUM TOP						
RB47A	FL 4"/ 7	36"	21"	26"	35	$579

4¼"W angle slides accommodate 17" to 19" round pizza pans or 16" to 17" square pans.

PIZZA PAN STAND
CHROME PLATED STEEL CONSTRUCTION

MODEL	H	W	D	WT	PRICE
PR-15W	27¾"	12"	12"	15	$65

Holds pans 10" to 17" dia. x 1¼" deep.
15 shelves, 1 3/8" spacing.

DOUGH BOX PLASTIC CONSTRUCTION

MODEL	H	W	D	WT	PRICE
PB1826-3 *	3"	18"	26"	4	$30
PBC **	1"	18"	26"	2	$23
DOUGH BOX DOLLY ALUMINUM CONTRUCTION					
PBD	7½"	17¾"	25¼"	15	$226

*Dough boxes are packed (6) per case.
** Dough box covers packed (12) per case.
***Pricing noted is per each.

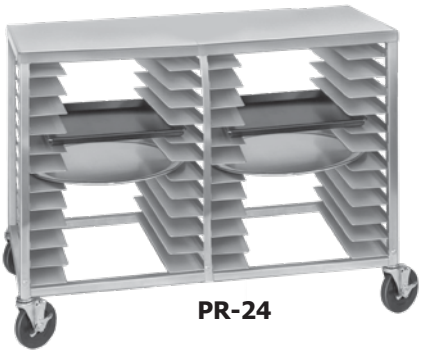

PR-24

PR-15W

Includes Brackets for Mounting to Wall

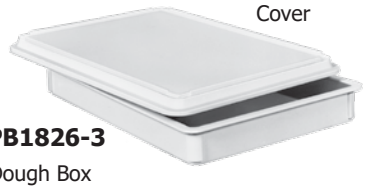

PB1826-3
Dough Box

PBC
Cover

PBD
Dough Box Dolly

FBR-18

Box Bus / Mobile Carts

BUS BOX CARTS ALUMINUM CONSTRUCTION

MODEL	Spacing/Levels	H	W	D	WT	PRICE
BBC-3	7" / 3	41"	21½"	18"	15	$315
BBC-6	7" / 6	41"	42"	18"	30	$447
BUS BOX - PLASTIC CONTRUCTION						
BB5		7"	15½"	20¼"	2	$20

BBC-3

Fry Basket Racks

FRY BASKET RACKS
ALUMINUM CONSTRUCTION

MODEL	Spacing/Capacity	H	W	D	WT	PRICE
FBR-18	5" / 18 Baskets	64¼"	19"	26"	30	$622
FBR-27	5" / 27 Baskets	64¼"	26"	26"	35	$742

Removable drip pan.

Ingredient Bins/Poly Carts & Racks

123P

600

6ABC

INGREDIENT BINS ALUMINUM / PLASTIC CONST.						
MODEL		**H**	**W**	**D**	**WT**	**PRICE**
123P *	Triple Bin	28"	17½"	31"	25	$862
123FRAME	Frame Only					$314
123B **	Replacement Bin					$206
123C	Replacement Cover					$84

* **123P** comes with white, yellow and blue bins, with clear covers, in an all-welded mobile aluminum cart. 50 lb. capacity per bin.
** **123B** color must be specified (white, yellow or blue).

BULK POLY CARTS				ALUMINUM FRAME			STAINLESS STEEL FRAME		
	H	**W**	**D**	**MODEL**	**WT**	**PRICE**	**MODEL**	**WT**	**PRICE**
6 Bushel	36"	21¾"	32"	**6ABC**	20	$654	**6SBC**	34	$982
8 Bushel	36"	21¾"	41"	**8ABC**	33	$728	**8SBC**	56	$1,070

- Bushel included.
- Replacements bushels:
  SL6 6 Bushel Polyethylene Tub 32"W x 21¾"D x 21"H – $269
  SL8 8 Bushel Polyethylene Tub 41"W x 21¾"D x 41"H – $420

JUMBO POLY CARTS ALUMINUM CONSTRUCTION						
MODEL		**H**	**W**	**D**	**WT**	**PRICE**
600	Cart & Lug	30"	19"	31"	21	$563
L814	Lug	30"	19¼"	12"	9	$210
L814C	Cover	30½"	19¾"	2"	5	$102

Rigid white polyethylene lug (19 gal. capacity).
Lugs are cross stackable and tapered for nesting.

L814 Lugs

Lug Covers
Available
L814C

PBA405A

PBA001

PBA708

POLY BOX RACKS ALUMINUM CONSTRUCTION						
MODEL	**Spacing / Capacity**	**H**	**W**	**D**	**WT**	**PRICE**
PBA708	7½" / 8 Boxes	70"	20½"	26"	27	$534
PBA415	4" / 15 Boxes	70"	20½"	26"	33	$633
PBA707	7½" / 7 Boxes	64"	20½"	26"	25	$512
PBA406	4" / 6 Boxes	38"	20½"	26"	22	$469
PBA405A	4"/ 5 Boxes	32"	20¾"	26"	27	$654
PBA001	1 Box	29"	18¾"	26¼"	15	$407

Holds 18" x 26" or 18" x 13" plastic food boxes.

Stocking Trucks

STOCKING/MARKING TRUCKS

MODEL	Deck	H	W	D	WT	PRICE
CHROME CONSTRUCTION						
STKC200	Wire	38¼"	18½"	44"	49	$480
STKC200G	Galvanized	38¼"	18½"	44"	50	$557
STKG100	Galvanized	32"	17"	40"	40	$458
STKG100H	w/ Handle	34"	19"	46"	42	$480
GALVANIZED – TUBULAR BOTTOM						
STKG300	Polished	32"	20"	46"	42	$545
STKG300H	w/ Handle	34"	22"	52"	44	$611
GALVANIZED – SOLID BOTTOM						
STKG400	Polished	34"	20"	46"	43	$589
STKG400H	w/ Handle	34"	22"	52"	45	$611

STKC200

STKG100H

STKG400H

U-BOAT TRUCK STEEL CONSTRUCTION
2,000 lb. Capacity

MODEL	H	W	D	WT	PRICE
U1648DS	60"	16"	48"	85	$390
U1660DS	60"	16"	60"	105	$429

/S1660S – $106
Removable Shelf

Diamond Deck

U1660DS

HAND TRUCK STEEL CONST.
550 lb. Capacity

MODEL	H	W	WT	PRICE
RHTDP8	52"	18"	32	$206

8½" beveled nose plate.
550 lb. load capacity.

Dual Pin Handles

RHTDP8

HEAVY DUTY TUBULAR STEEL CART
STEEL CONSTRUCTION

MODEL	Casters	H	W	D	WT	PRICE
STK18404	4	36"	18"	44"	72	$490
STK18406	6	36"	18"	44"	80	$534
ALUMINUM CONSTRUCTION						
STK18404A	4	36"	18"	44"	72	$490
STK18406A	6	36"	18"	44"	80	$534

NEW ITEM

STK18406A

PLATFORM TRUCK STEEL CONST.
2,000 lb. Capacity

MODEL	H	W	D	WT	PRICE
PT2448	35"	24"	50"	102	$563
PT3060	35"	30"	62"	142	$654

PT2448
Smooth Deck

STOCKING TRUCK CHROME CONST.

MODEL	Deck	H	W	D	WT	PRICE
STKC500	Tubular	41"	18"	37"	95	$306

STKC500

Social Distancing Dividers

SOCIAL DISTANCING DIVIDERS

MODEL	H	W	D	WT	PRICE	
FLOOR DIVIDER					QTY: 5-9	10+
SDDF-3670	70"	36"	16"	9	$444	$399
COUNTER DIVIDER						
SDDC-4832	32"	48"	16"	9	$351	$315

NEW ITEM

* minimum order applies

NEW ITEM

Custom Sizes Available

SDDF-3670

SDDC-4832

Poly Top Work Tables

POLY TOP ACCESSORIES

MODEL		PRICE
BS3	Stainless Backsplash 36"	$125
BS4	Stainless Backsplash 48"	$144
BS5	Stainless Backsplash 60"	$158
BS6	Stainless Backsplash 72"	$177
LHSSS	Lug and Lug Holding Slide	$99
PLHS	Platter Holder	$66
TCA-5	Heavy Duty Casters (4)	$209

BTA48
Table Mount

BOAT RACKS

MODEL	H	W	D	WT	PRICE
WALL MOUNTED					
BWA36	24"	36"	15"	14	$290
BWA48	24"	48"	15"	16	$307
BWA60	24"	60"	15"	19	$322
BWA72	24"	72"	15"	22	$421
TABLE MOUNTED					
BTA48	24"	48"	15"	22	$361
BTA60	24"	60"	15"	25	$410
BTA72	24"	72"	15"	28	$491

Adjustable Divider: **/BRAD** – $33

BWA36
shown with
optional **/BRAD**

POLY TOP WORK TABLES

MODEL	H	W	D	WT	PRICE
CT248	34"	48"	24"	59	$1,146
CT260	34"	60"	24"	69	$1,299
CT272	34"	72"	24"	79	$1,489
CT348	34"	48"	30"	68	$1,265
CT360	34"	60"	30"	80	$1,419
CT372	34"	72"	30"	92	$1,742

CT248

PCR7M

WET PRODUCE CART
ALUMINUM CONSTRUCTION

MODEL	H	W	D	WT	PRICE
WPC2539	37½"	22¾	49"	56	$728

Full top perimeter bumper.

Custom Sizes Available

Reversible and removable top and bottom pan shelves.

WPC2539

PRODUCE CRISPING RACKS ALUMINUM CONST.

MODEL	Shelves / Spacing	H	W	D	WT	PRICE
PCR7*	10¾" / 7 Levels	72"	33½"	29"	32	$544
PCR7M	10¾" / 7 Levels	78"	33½"	29"	43	$699

* Stationary

Lug Racks

ALL WELDED				STANDARD SERIES ALUMINUM CONSTRUCTION			STAINLESS SERIES STAINLESS STEEL CONST.			HEAVY-DUTY SERIES * ALUMINUM CONSTRUCTION		
Lugs	H	W*	D	MODEL	WT	PRICE	MODEL	T	PRICE	MODEL	WT	PRICE
12	70½"	36"	26"	**512LA**	33	$688	**512LS**	58	$1,456	**AXD512L**	45	$1,398
6	70½"	19"	26"	**506LA**	24	$377	**506LS**	42	$763	**AXD506L**	36	$797
4	53"	19"	26"	**504LA**	20	$322	**504LS**	38	$579	**AXD504L**	32	$688
3	40½"	19"	26"	**503LA**	18	$268	**503LS**	36	$490	**AXD503L**	30	$653
2	29½"	19"	26"	**502LA**	17	$213	**502LS**	32	$403	**AXD502L**	29	$509
1	16½"	19"	26"	**501LA**	16	$159	**501LS**	30	$316	**AXD501L**	28	$349

*Heavy-Duty Series width is 1/2" wider.

PUSH HANDLE OPTIONS
Must be factory installed and ordered with rack.
/PHLA Aluminum – $85
/PHLS Stainless – $137

506LA

501LA

USR7

ULR6

ULR3/P
shown with optional poly top **/P**

Custom Sizes Available

See page 27 for complete line of trays and platters.

UNIVERSAL				STANDARD SERIES ALUMINUM CONST.			HEAVY-DUTY SERIES ALUMINUM CONSTRUCTION		
Spacing/Shelves	H	W	D	MODEL	WT	PRICE	MODEL	WT	PRICE
9-1/2" / 6	70¼"	21"	28½"	**ULR6**	30	$573	**AXDULR6**	50	$1,236
8-3/4" / 7	70¼"	40"	28½"	**USR7**	55	$816	**AXDUSR7**	80	$1,834
9-1/2" / 3	37½"	21"	28½"	**ULR3**	18	$425	**AXDULR3**	32	$890

Display/Transport Racks

WIRE DISPLAY STAND CHROME PLATED STEEL CONSTRUCTION					
MODEL	H	W	D	WT	PRICE
WDS1410	10"	14"	8"	5	$40

WDS1410

SRS-7

SORT-4

SM-4

DISPLAY / UNIVERSAL RACKS ALUMINUM CONSTRUCTION						
MODEL	Spacing/ Capacity	H	W	D	WT	PRICE
SPOT MERCHANDISER						
SM-4	12"/ 4	55¼"	40"	26¼"	34	$815
SLANTED DISPLAY RACKS						
SRS-7	8¾" / 7	70"	29½"	18"	23	$521
SRS-11	5" / 11	70"	29½"	18"	26	$576
SLANTED DISPLAY RACK w/ REMOVABLE WIRE SHELVES						
SORT-4	16½" / 4	76¼"	47"	24"	95	$1,353

ALL WELDED					STANDARD SERIES ALUMINUM CONSTRUCTION			STAINLESS SERIES STAINLESS STEEL CONST.			HEAVY-DUTY SERIES * ALUMINUM CONSTRUCTION		
Tray W	Spacing/Capacity	H	W*	D	MODEL	WT	PRICE	MODEL	WT	PRICE	MODEL	WT	PRICE
10½"	5" / 6	36"	12½"	26"	**516AP3**	15	$312	**516SP3**	27	$633	**AXD516P3**	20	$685
10½"	6" / 5	36"	12½"	26"	**517AP3**	13	$291	**517SP3**	25	$557	**AXD517P3**	25	$633
10½"	5" / 12	70"	12½"	26"	**516AP**	29	$415	**516SP**	50	$818	**AXD516P**	37	$906
10½"	6" / 10	70"	12½"	26"	**517AP**	25	$389	**517SP**	46	$742	**AXD517P**	35	$840
10½"	6" / 6	44"	12½"	26"	**522AP**	20	$352	**522SP**	39	$616	**AXD522P**	32	$763
10½"	5" / 11	64"	12½"	26"	**516AP6**	22	$389	**516SP6**	40	$807	**AXD516P6**	32	$830
10½"	6" / 9	64"	12½"	26"	**517AP6**	20	$381	**517SP6**	38	$731	**AXD517P6**	30	$763
12½"	5" / 6	36"	15¼"	26"	**518AP3**	15	$312	**518SP3**	27	$633	**AXD518P3**	31	$676
12½"	6" / 5	36"	15¼"	26"	**519AP3**	14	$302	**519SP3**	26	$562	**AXD519P3**	30	$642
12½"	5" / 12	70"	15¼"	26"	**518AP**	26	$413	**518SP**	52	$840	**AXD518P**	38	$895
12½"	6" / 10	70"	15¼"	26"	**519AP**	24	$400	**519SP**	48	$747	**AXD519P**	36	$860
12½"	6" / 6	44"	15¼"	26"	**523AP**	21	$352	**523SP**	40	$639	**AXD523P**	33	$773
12½"	5" / 11	64"	15¼"	26"	**518AP6**	22	$400	**518SP6**	46	$830	**AXD518P6**	35	$825
12½"	6" / 9	64"	15¼"	26"	**519AP6**	20	$389	**519SP6**	44	$735	**AXD519P6**	34	$838
18"	5" / 6	36"	20½"	26"	**520AP3**	17	$319	**520SP3**	30	$673	**AXD520P3**	46	$696
18"	6" / 5	36"	20½"	26"	**521AP3**	16	$300	**521SP3**	28	$617	**AXD521P3**	44	$652
18"	5" / 12	70"	20½"	26"	**520AP**	30	$424	**520SP**	56	$895	**AXD520P**	44	$925
18"	6" / 10	70"	20½"	26"	**521AP**	28	$397	**521SP**	52	$864	**AXD521P**	42	$870
18"	6" / 6	44"	20½"	26"	**524AP**	23	$373	**524SP**	44	$639	**AXD524P**	35	$816
18"	5" / 11	64"	20½"	26"	**520AP6**	28	$407	**520SP6**	50	$885	**AXD520P6**	40	$849
18"	6" / 9	64"	20½"	26"	**521AP6**	25	$364	**521SP6**	46	$830	**AXD521P6**	39	$795

*Heavy-Duty Series is ½" wider.

LIFETIME TOUGH

519AP

AXD519P

See page 27 for complete line of trays and platters.

NSF

MADE IN THE USA

UPR8

UNIVERSAL PLATTER RACKS
ALUMINUM CONSTRUCTION

MODEL	SHELVES*	H	W	D	WT	PRICE
STANDARD SERIES						
UPR7	7	64"	16"	33"	35	$557
UPR8	8	70¼"	16"	33"	37	$607
UPR5	5	45½"	16"	33"	23	$540
HEAVY-DUTY SERIES						
AXDUPR7	7	64"	16½"	33"	70	$1,200
AXDUPR8	8	70¼"	16½"	33"	75	$1,309
AXDUPR5	5	45½"	16½"	33"	55	$1,168

*6¾" spacing.

Steam Table Pan Racks

STEAM TABLE PAN RACKS				STANDARD SERIES ALUMINUM CONST.			HEAVY-DUTY SERIES * ALUMINUM CONST.		
Spacing/ Capacity	H	W*	D	MODEL	WT	PRICE	MODEL	WT	PRICE
3" / 20	70"	20½"	26"	**UTR-20**	54	$840	**AXD-UTR-20**	68	$1,516
4" / 15	70"	20½"	26"	**UTR-15**	50	$818	**AXD-UTR-15**	63	$1,484
5" / 12	70"	20½"	26"	**UTR-12**	44	$797	**AXD-UTR-12**	55	$1,440
6" / 10	70"	20½"	26"	**UTR-10**	41	$775	**AXD-UTR-10**	52	$1,407
3" / 18	64"	20½"	26"	**UTR-18**	50	$830	**AXD-UTR-18**	63	$1,494
5" / 11	64"	20½"	26"	**UTR-11**	37	$785	**AXD-UTR-11**	47	$1,429
3" / 9	36"	20½"	26"	**UTR-9**	29	$753	**AXD-UTR-9**	37	$1,359
5" / 5	36"	20½"	26"	**UTR-5**	26	$639	**AXD-UTR-5**	33	$1,189

3¼" wide pan slides accommodate 18" x 26" sheet pans and 12" x 20" steam table pans.
*Heavy-Duty Series width is ½" wider.

UTR-12

AXD-UTR-15

ETPR-3S

ETPR-3E

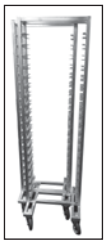

Racks nest to save valuable floor space when not in use.

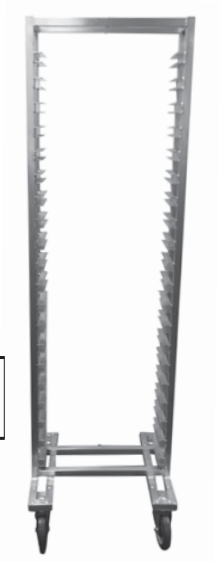

LPNS-19

LO PROFILE NESTING RACKS ALUMINUM CONSTRUCTION						
MODEL	Spacing / Capacity	H	W	D	WT	PRICE
LPNS-19	3"/19	70¼"	15¼"	18½"	26	$594
LPNS-15	4"/15	70¼"	15¼"	18½"	24	$572
LPNS-11	5"/11	64"	15¼"	18½"	25	$540

LIFETIME TOUGH

STPR-5

12 X 20 STEAM TABLE PAN RACKS				STANDARD SERIES ALUMINUM CONST.			STAINLESS SERIES STAINLESS CONST.			HEAVY-DUTY SERIES * ALUMINUM CONST.		
Spacing/ Capacity	H	W	D	MODEL	WT	PRICE	MODEL	WT	PRICE	MODEL	WT	PRICE
3" / 38 (2)	70½"	24½"	26"	**ETPR-3S**	29	$741	**SSPR-3S**	66	$1,214			
5" / 22 (2)	70½"	24½"	26"	**ETPR-5S**	27	$676	**SSPR-5S**	51	$1,004			
3" / 19 (1)	70½"	16½"	22"	**ETPR-3E**	28	$671	**SSPR-3E**	58	$1,135			
5" / 11 (1)	70½"	16½"	22"	**ETPR-5E**	25	$617	**SSPR-5E**	46	$1,058			
3" / 40 (2)	70"	24"	26"							**STPR-3**	56	$1,589
5" / 24 (2)	70"	24"	26"							**STPR-5**	44	$1,200
8" / 16 (2)	70"	24"	26"							**STPR-8**	39	$982
3" / 34 (2)	64"	24"	26"	**ETPR-3S6**	25	$721	**SSPR-3S6**	60	$1,157	**STPR-36**	51	$1,512
5" / 22 (2)	64"	24"	26"	**ETPR-5S6**	22	$654	**SSPR-5S6**	46	$981	**STPR-56**	40	$1,275
3" / 19 (1)	64"	16½"	22"	**ETPR-3E6**	23	$643	**SSPR-3E6**	53	$1,091			
5" / 11 (1)	64"	16½"	22"	**ETPR-5E6**	20	$589	**SSPR-5E6**	40	$970			
8" / 7 (1)	64"	24"	26"							**STPR-86**	35	$905
36" HEIGHT												
3" / 18 (2)	36"	24"	26"							**STPR-33**	36	$1,298
5" / 10 (2)	36"	24"	26"							**STPR-53**	30	$927
8" / 8 (2)	36"	24"	26"							**STPR-83**	24	$654
3" / 18 (2)	36"	24"	26"	**ETPR-3S3**	17	$607	**SSPR-3S3**	35	$917			
5" / 10 (2)	36"	24"	26"	**ETPR-5S3**	15	$545	**SSPR-5S3**	27	$873			
3" / 9 (1)	36"	16½"	22"	**ETPR-3E3**	16	$545	**SSPR-3E3**	31	$873			
5" / 5 (1)	36"	16½"	22"	**ETPR-5E3**	15	$490	**SSPR-5E3**	25	$852			

Holds 12" x 20" steam table, deli, or hotel pans.
* **STPR:** Extra wide, 3" heavy-duty pan slides support bottom of pan.

See Page 1 or 25 for list of options and accessories.

ADJUSTABLE UNIVERSAL RACK
ALUMINUM CONSTRUCTION

MODEL	Spacing/ Capacity	H	W	D	WT	PRICE
AUR-13	1½" / 13	69"	25½"	25½"	95	$1,290
AUR-12	1½" / 12	64"	25½"	25½"	90	$1,247
AUR-6	1½" / 6	36"	25½"	25½"	47	$901
AURA	Additional Pan Slides (set of 2)					$72

ALL-WELDED UNIVERSAL RACK
ALUMINUM CONSTRUCTION

MODEL	Spacing / Capacity	H	W	D	WT	PRICE
UR-10	6" / 10	70"	25½"	26"	70	$1,238
UR-12	5" / 12	70"	25½"	26"	75	$1,277
UR-13	4½" / 13	70"	25½"	26"	78	$1,309
UR-11	5" / 11	64"	25½"	26"	70	$1,214
UR-111/S	5" / 4	31"	25½"	26"	47	$1,250
UR-5	5" / 5	36"	25½"	26"	50	$981

6" universal angles support pans and trays of varying widths.

AUR-13

UR-10

Available in Double Size

Custom Sizes Available

Donut Basket / Screen Racks

DONUT BASKET RACKS ALUMINUM CONSTRUCTION

MODEL	Spacing/Capacity	H	W	D	WT	PRICE
Racks for 23" x 23" Donut Screens						
546A	3" / 20 Screens	70³/₈"	25½ "	23¼"	37	$545
547A	4" / 15 Screens	70³/₈"	25½ "	23¼"	32	$522
548A	8" / 18 Screens	64"	25½ "	23¼"	35	$533
549A	4" / 13 Screens	64"	25½ "	23¼"	30	$511
Racks for 23" x 33" Donut Screens						
550A	3" / 20 Screens	70³/₈"	35½ "	23¼"	39	$579
551A	4" / 15 Screens	70³/₈"	35½ "	23¼"	34	$557
552A	3" / 18 Screens	64"	35½ "	23¼"	37	$567
553A	4" / 15 Screens	64"	35½ "	23¼"	35	$545

DONUT BASKET RACK ALUMINUM CONSTRUCTION

MODEL	Spacing/Capacity	H	W	D	WT	PRICE
485DD	4¾" / 12 Levels	64"	29½"	21"	20	$1,305
486DD	4¾" / 13 Levels	71¼"	29½"	21"	68	$1,414
484DD	4" / 5 Levels	24"	12⅛"	27"	22	$454

Extra heavy duty 2" wide slides for 26½" wide wire donut baskets.

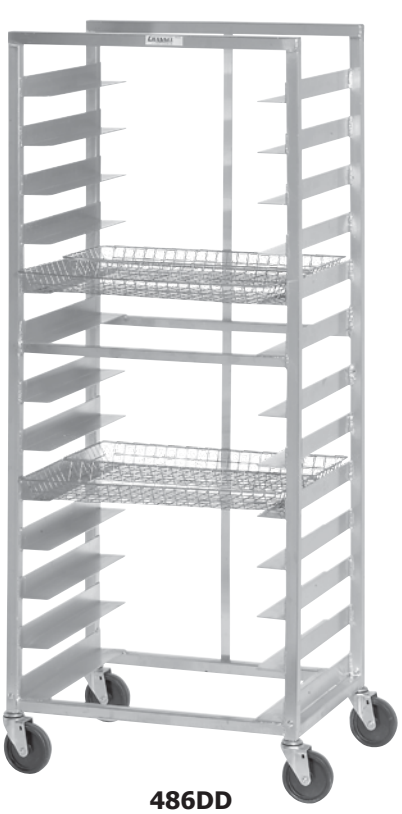

486DD

546A

484DD

Banquet/Utility Carts

QUEEN MARY ALUMINUM CONSTRUCTION						
MODEL	Spacing / Shelves	H	W	D	WT	PRICE
QMA2860-3	27" / 3	66"	62"	28"	140	$2,249
QMA2860-4	18" / 4	66"	62"	28"	160	$2,328
QMA2860-5	13½" / 5	66"	62"	28"	180	$2,393
QMA2860-6	10¾" / 6	66"	62"	28"	200	$2,570

UTILITY / BUSSING CARTS STAINLESS CONSTRUCTION						
MODEL	Shelves	H	W	D	WT	PRICE
US1524-3	3	34"	27⅝"	16"	39	$403
US1827-3	3	34"	31"	19"	42	$453
US2135-3	3	37¼"	39½"	22"	68	$773

HD UTILITY / BUSSING CARTS ALUMINUM CONSTRUCTION					
MODEL	H	W	D	WT	PRICE
TDC2937A-2	36"	37"	29"	42	$1,214
TDC2953A-2	36"	53"	29"	60	$1,456
TDC2937A-3	36"	37"	29"	55	$1,528
TDC2953A-3	36"	53"	29"	75	$1,758

COOLER / BOX TRANSPORT TRUCKS ALUMINUM CONSTRUCTION					
MODEL	H	W	D	WT	PRICE
BBT-2	67½"	60"	27"	68	$1,044
BBT-3620-2	67½"	36"	20"	44	$922
BBT-4220-2	67½"	42"	20"	48	$946
BBT-4820-2	67½"	48"	20"	52	$1,015
BBT-5420-2	67½"	54"	20"	56	$1,036
BBT-6020-2	67½"	60"	20"	60	$1,070

Additional Shelves Available

Custom Sizes Available

QMA2860-5

OPTION:
/PHQM Pull Handle – $85
Must be factory installed and ordered with cart.

BBT-2

LIFETIME TOUGH

CORRECTION FACILITY APPROVED

MADE IN THE USA

TDC2953A

US1827-3

Tray Drying Racks

MOBILE DRYING RACKS ALUMINUM CONSTRUCTION						
MODEL	Spacing / Shelves/Slots per Shelf	H	W	D	WT	PRICE
FTDR-3	1½"/ 3 /40	60"	63"	30"	215	$3,384
ATDR-3	1½"/ 3 / 40	60"	63"	30"	215	$3,241
FTDR-4	2¾"/ 3 / 21	60"	63"	30"	210	$3,384
ATDR-4	2¾"/ 3 / 21	60"	63"	30"	210	$3,241
TDRS-3	Addl. Shelves – 1½" Spacing					$851
TDRS-4	Addl. Shelves – 2¾" Spacing					$851

MOBILE DRYING RACKS - HD ALL–WELDED ALUMINUM CONSTRUCTION						
MODEL	Spacing/ Shelves/Slots per Shelf	H	W	D	WT	PRICE
FTDR-3/PP	1½"/ 3 /40	60"	63"	30"	240	$3,420
FTDR-4/PP	2¾"/ 3 / 21	60"	63"	30"	235	$3,420

ATDR ships knocked down. Holds various tray sizes. Shelves are adjustable.

FTDR all-welded, fully assembled and ready for use. Sample tray required with order.

ATDR-3

LIFETIME TOUGH

CORRECTION FACILITY APPROVED

FTDR-3/PP

Dollies

LIFETIME TOUGH

BUN PAN / DOUGH BOX DOLLY
ALUMINUM CONSTRUCTION

MODEL	H	W	D	WT	PRICE
HEAVY DUTY BUN PAN TRUCK					
XBPT-1	55"	21¼"	26½"	30	$709
XBPT-2	55"	40¾"	26½"	50	$816
HD HIGH CAPACITY BUN PAN DOLLY					
XBPT-1AB	73"	21¾"	28"	75	$1,245
BUN PAN DOLLY / TRUCK					
BPT-2	33½"	20½"	27½"	22	$360
BPT-2TP	33½"	20½"	27½"	23	$432
BPD	7½"	18¾	26½"	20	$217
DOUGH BOX DOLLY					
PBD	7½"	17¾"	25¼"	15	$226

XBPT-2

XBPT-1AB

BPT-2TP

GLASS RACK / MILK CRATE DOLLY
ALUMINUM CONSTRUCTION

MODEL	Racks/Crates	H	W	D	WT	PRICE
GLASS RACK DOLLIES						
GRD	1 / 20" x 20"	7½"	22"	22"	14	$226
GRD2	2 / 20" x 40"	7½"	44"	22"	20	$364
MILK CRATE DOLLIES						
MC1313	1 / 13" x 13"	7½"	14¼"	14¼"	14	$226
MC1326	2 / 13" x 13"	7½"	14¼"	27¼"	16	$249
MC1319	1 / 13" x 19"	7½"	14¼"	20¼"	15	$236
MC1338	2 / 13" x 19"	7½"	27¼"	20¼"	17	$259

BPD

Custom Sizes Available

PBD

POULTRY CRATE DOLLY w/ DRIP PAN
ALUMINUM or STAINLESS STEEL

MODEL	H	W	D	WT	PRICE
SPCD-A	13"	23"	28"	25	$381
SPCD-S	12½"	20"	27"	33	$600

Options:

/PH-10 Pull Hook – $42
Must be factory installed and ordered with dolly.

SPCD-S

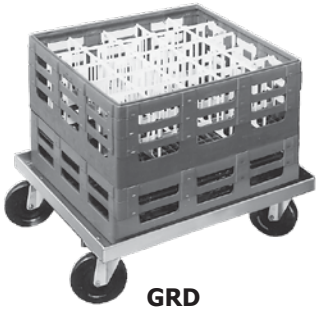

GRD

MOBILE DUNNAGE DOLLY
ALUMINUM CONSTRUCTION

MODEL	H	W	D	WT	PRICE
MD2024	8"	24"	20"	29	$429
MD2036	8"	36"	20"	31	$442
MD2042	8"	42"	20"	33	$449
MD2048	8"	48"	20"	35	$458
MD2054	8"	54"	20"	37	$469
MD2060	8"	60"	20"	39	$480
MD2424	8"	24"	24"	30	$435
MD2436	8"	36"	24"	32	$446
MD2442	8"	42"	24"	34	$453
MD2448	8"	48"	24"	36	$463
MD2454	8"	54"	24"	38	$475
MD2460	8"	60"	24"	40	$487
SOLID TOP					
AD2428	8"	28"	24"	34	$436
AD2433	8"	33"	24"	37	$457
AD2440	8"	40"	24"	40	$485

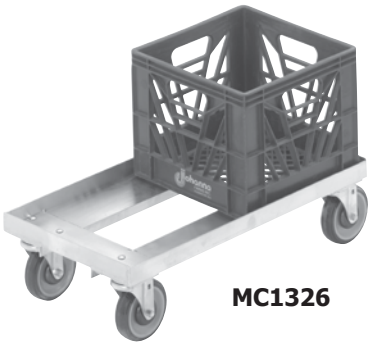

MC1326

OPTION FOR MOBILE DUNNAGE:
/H24 24" high handle – $70
Must be factory installed and ordered with dolly.

MD2036

OPTION:
/052 Heavy-duty caster upgrade - $141

For further details, see complete specifications at channelmfg.com or AutoQuotes.

Cafeteria Tray Racks

SINGLE SECTION				STANDARD SERIES ALUMINUM CONST.			STAINLESS SERIES STAINLESS CONST.			TRAPEZOIDAL SERIES ALUMINUM CONST.		
Spacing/ Capacity/ Tray Size	H	W	D	MODEL	WT	PRICE	MODEL	WT	PRICE	MODEL	WT	PRICE
70" HEIGHT												
3" / 40 / 14 x 18	70"	21"	30"	**437A**	44	$959	**437S**	75	$1,820	**T437A**	64	$1,262
4" / 30 / 14 x 18	70"	21"	30"	**438A**	37	$883	**438S**	64	$1,737	**T438A**	53	$1,049
5" / 24 / 14 x 18	70"	21"	30"	**439A**	33	$783	**439S**	58	$1,545	**T439A**	46	$926
6" / 20 / 14 x 18	70"	21"	30"	**440A**	30	$760	**440S**	54	$1,432	**T440A**	42	$849
3" / 40 / 15 x 20	70"	23"	30"	**445A**	44	$970	**445S**	76	$2,087	**T445A**	64	$1,250
4" / 30 / 15 x 20	70"	23"	30"	**446A**	37	$886	**446S**	65	$1,765	**T446A**	53	$1,031
5" / 24 / 15 x 20	70"	23"	30"	**447A**	33	$783	**447S**	59	$1,558	**T447A**	46	$942
6" / 20 / 15 x 20	70"	23"	30"	**448A**	30	$750	**448S**	56	$1,456	**T448A**	42	$854
64" HEIGHT												
3" / 36 / 14 x 18	64"	21"	30"	**437A6**	40	$873	**437S6**	70	$1,886	**T437A6**	62	$1,196
4" / 28 / 14 x 18	64"	21"	30"	**438A6**	34	$805	**438S6**	60	$1,588	**T438A6**	50	$983
5" / 20 / 14 x 18	64"	21"	30"	**439A6**	31	$716	**439S6**	54	$1,404	**T439A6**	44	$883
6" / 18 / 14 x 18	64"	21"	30"	**440A6**	28	$698	**440S6**	50	$1,309	**T440A6**	40	$805
3" / 36 / 15 x 20	64"	23"	30"	**445A6**	40	$916	**445S6**	72	$1,908	**T445A6**	62	$1,203
4" / 28 / 15 x 20	64"	23"	30"	**446A6**	34	$813	**446S6**	62	$1,614	**T446A6**	50	$966
5" / 20 / 15 x 20	64"	23"	30"	**447A6**	31	$728	**447S6**	57	$1,424	**T447A6**	44	$877
6" / 18 / 15 x 20	64"	23"	30"	**448A6**	28	$685	**448S6**	51	$1,331	**T448A6**	40	$757
36" HEIGHT												
3" / 18 / 14 x 18	36"	21"	30"	**437A3**	24	$720	**437S3**	40	$1,548	**T437A3**	35	$1,044
4" / 14 / 14 x 18	36"	21"	30"	**438A3**	20	$663	**438S3**	34	$1,302	**T438A3**	28	$831
5" / 10 / 14 x 18	36"	21"	30"	**439A3**	19	$585	**439S3**	33	$1,152	**T439A3**	25	$708
6" / 8 / 14 x 18	36"	21"	30"	**440A3**	17	$570	**440S3**	30	$1,079	**T440A3**	24	$631
3" / 18 / 15 x 20	36"	23"	30"	**445A3**	25	$728	**445S3**	40	$1,567	**T445A3**	35	$1,050
4" / 14 / 15 x 20	36"	23"	30"	**446A3**	21	$666	**446S3**	34	$1,324	**T446A3**	28	$813
5" / 10 /15 x 20	36"	23"	30"	**447A3**	18	$607	**447S3**	33	$1,277	**T447A3**	25	$723
6" / 8 / 15 x 20	36"	23"	30"	**448A3**	17	$563	**448S3**	30	$1,214	**T448A3**	23	$635

440A

CTR1418

Custom Sizes Available

Must Provide Sample Tray with Order

See Page 25 for list of options and accessories for items on this page.

TRAY DELIVERY RACKS w/ SOLID ALUMINUM TOP ALUMINUM CONSTRUCTION						
Spacing / Capacity / Tray Size	MODEL	H	W	D	WT	PRICE
5" / 36 / 14X18	**CTR1418**	54"	41"	30"	59	$1,525
5" / 24 / 14X18	**CTR14186**	36"	41"	30"	40	$1,492
5" / 36 / 15X20	**CTR1520**	54"	44"	30"	61	$1,528
5" / 24 / 15X20	**CTR15206**	36"	44"	30"	42	$1,495

T440A

Custom Sizes Available

Must Provide Sample Tray with Order

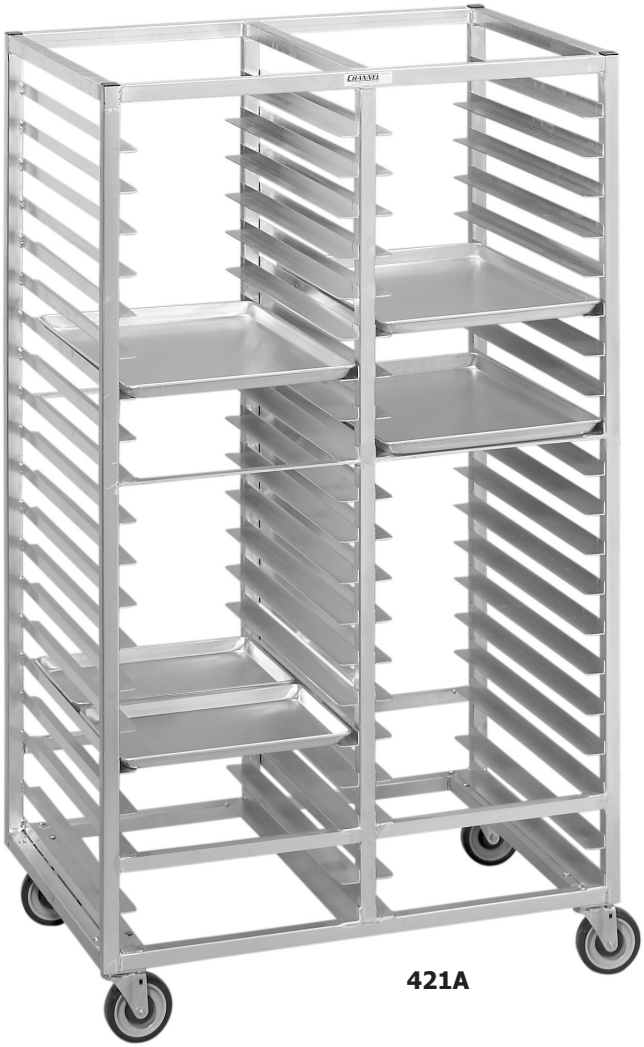

421A

DOUBLE SECTION				STANDARD SERIES ALUMINUM CONST.			STAINLESS SERIES STAINLESS CONST.		
Spacing / Capacity / Tray Size	H	W	D	MODEL	WT	PRICE	MODEL	WT	PRICE
70" HEIGHT									
2" / 60 / 18 x 26	70"	41"	26"	**420A**	75	$1,688	**420S**	128	$3,040
3" / 40 / 18 x 26	70"	41"	26"	**421A**	65	$1,444	**421S**	111	$2,600
4" / 30 / 18 x 26	70"	41"	26"	**422A**	51	$1,356	**422S**	87	$2,440
5" / 24 / 18 x 26	70"	41"	26"	**423A**	43	$1,292	**423S**	73	$2,324
6" / 20 / 18 x 26	70"	41"	26"	**424A**	37	$1,266	**424S**	63	$2,280
3" / 80 / 14 x 18	70"	41"	30"	**457A**	72	$1,571	**457S**	122	$2,828
4" / 60 / 14 x 18	70"	41"	30"	**458A**	59	$1,430	**458S**	100	$2,573
5" / 48 / 14 x 18	70"	41"	30"	**459A**	51	$1,364	**459S**	87	$2,456
6" / 40 / 14 x 18	70"	41"	30"	**460A**	45	$1,310	**460S**	77	$2,358
3" / 80 / 15 x 20	70"	45"	30"	**465A**	72	$1,572	**465S**	122	$2,829
4" / 60 / 15 x 20	70"	45"	30"	**466A**	59	$1,434	**466S**	100	$2,582
5" / 48 / 15 x 20	70"	45"	30"	**467A**	51	$1,372	**467S**	87	$2,469
6" / 40 / 15 x 20	70"	45"	30"	**468A**	45	$1,306	**468S**	77	$2,352
64" Height									
2" / 54 / 18 x 26	64"	41"	26"	**420A6**	70	$1,542	**420S6**	119	$2,776
3" / 36 / 18 x 26	64"	41"	26"	**421A6**	60	$1,317	**421S6**	102	$2,369
4" / 28 / 18 x 26	64"	41"	26"	**422A6**	45	$1,235	**422S6**	77	$2,221
5" / 20 / 18 x 26	64"	41"	26"	**423A6**	38	$1,169	**423S6**	65	$2,104
6" / 18 / 18 x 26	64"	41"	26"	**424A6**	34	$1,157	**424S6**	58	$2,083
3" / 72 / 14 x 18	64"	41"	30"	**457A6**	68	$1,450	**457S6**	116	$2,608
4" / 56 / 14 x 18	64"	41"	30"	**458A6**	55	$1,361	**458S6**	94	$2,449
5" / 44 / 14 x 18	64"	41"	30"	**459A6**	47	$1,316	**459S6**	80	$2,368
6" / 36 / 14 x 18	64"	41"	30"	**460A6**	43	$1,262	**460S6**	73	$2,270
3" / 72 / 15 x 20	64"	45"	30"	**465A6**	70	$1,430	**465S6**	119	$2,573
4" / 56 / 15 x 20	64"	45"	30"	**466A6**	57	$1,361	**466S6**	97	$2,449
5" / 44 / 15 x 20	64"	45"	30"	**467A6**	49	$1,259	**467S6**	83	$2,265
6" / 36 / 15 x 20	64"	45"	30"	**468A6**	43	$1,195	**468S6**	73	$2,149
36" Height									
2" / 30 / 18 x 26	36"	41"	26"	**420A3**	40	$1,267	**420S3**	68	$2,281
3" / 20 / 18 x 26	36"	41"	26"	**421A3**	35	$1,080	**421S3**	60	$1,945
4" / 15 / 18 x 26	36"	41"	26"	**422A3**	27	$1,012	**422S3**	46	$1,821
5" / 10 / 18 x 26	36"	41"	26"	**423A3**	24	$972	**423S3**	41	$1,750
6" / 8 / 18 x 26	36"	41"	26"	**424A3**	20	$949	**424S3**	34	$1,709
3" / 36 / 14 x 18	36"	41"	30"	**457A3**	40	$1,192	**457S3**	68	$2,144
4" / 28 / 14 x 18	36"	41"	30"	**458A3**	35	$1,072	**458S3**	60	$1,929
5" / 20 / 14 x 18	36"	41"	30"	**459A3**	27	$1,027	**459S3**	46	$1,847
6" / 16 / 14 x 18	36"	41"	30"	**460A3**	25	$980	**460S3**	43	$1,764
3" / 36 / 15 x 20	36"	45"	30"	**465A3**	38	$1,192	**465S3**	65	$2,144
4" / 28 / 15 x 20	36"	45"	30"	**466A3**	32	$1,079	**466S3**	54	$1,944
5" / 20 / 15 x 20	36"	45"	30"	**467A3**	28	$1,032	**467S3**	48	$1,859
6" / 16 / 15 x 20	36"	45"	30"	**468A3**	25	$982	**468S3**	43	$1,767

AVAILABLE OPTIONS / UPGRADES (visit channelmfg.com or AutoQuotes for complete list)

/009 - Pan Stop - Aluminum	$50
/010 - Pan Stop - Stainless Steel	$66
/011 - Caster Brakes (2)	$32
/015 - Pan Stop - Web-Strap	$59
/022 - Corner Bumpers (2)	$59
/024 - Corner Bumpers (4)	$106
/052 - Caster Upgrade, Heavy Duty	$141
/5B - Caster Brakes, Heavy Duty (2)	$48
/2W - Double Welded Runners	$185
/A - Work Top - Aluminum	$230
/AF - Adjustable Feet (4)	$63
/BA - Solid Bottom - Aluminum	$246
/BS - Solid Bottom - Stainless	$300
/FF - Steel Flanged Feet (4)	$44
/H24 - Dunnage Dolly Handle	$70
/P - Work Top - Poly	$252
/PB - Perimeter Bumpers (4)	$216
/PH-10 - Pull Handle	$42
/PP - Prison Package	$36
/S - Work Top - Stainless Steel	$285
/SW - Seal Weld	$53
/VB - Vertical Bumpers (4)	$193

Glass/Oval Tray Racks

GLASS RACKS
ALUMINUM CONSTRUCTION

MODEL	Spacing/ Capacity	H	W	D	WT	PRICE
GRR-6	6" / 10	70"	24"	22"	38	$545
GRR-63	6" / 5	36"	24"	22"	21	$410
GRR-8	8" / 8	70"	24"	22"	36	$498
GRR-83	8" / 4	36"	24"	22"	20	$377

Fits 20" x 20" glass racks.

OVAL TRAY RACKS
ALUMINUM CONSTRUCTION

MODEL	Spacing/ Capacity	H	W	D	WT	PRICE
SINGLE SECTION						
OT-6	6" / 10	70"	25"	26"	41	$752
OT-8	8" / 8	70"	25"	26"	38	$728
OT-63	6" / 5	36"	25"	26"	23	$566
OT-83	8" / 4	36"	25"	26"	20	$531
DOUBLE SECTION						
OT-6D	6" / 20	70"	48¾"	26"	72	$1,419
OT-8D	8" / 16	70"	48¾"	26"	64	$1,386

Extra wide 3¼" tray slides hold 22" x 26 7/8" oval trays.

Custom Sizes Available

GRR-8

OT-6

For further details, see complete specifications at channelmfg.com or AutoQuotes..

MOBILE SHELF TRUCK / FLIGHT CART
ALUMINUM CONSTRUCTION

MODEL	Spacing/ Shelves	H	W	D	WT	PRICE
MC2472-2	49" / 2	72"	75"	25"	130	$2,182
MC2472-3	24" / 3	72"	75"	25"	159	$2,599
MC2472-4	17" / 4	72"	75"	25"	180	$3,000

COS348

CONVECTION OVEN STAND
ALUMINUM CONSTRUCTION

MODEL	H	W	D	WT	PRICE
COS348	29"	48"	30"	59	$1,573

MC2472-4

TRAY DRYING RACKS – MOBILE
WIRE CONSTRUCTION

MODEL	Slot Spacing Total Capacity	H	W	D	WT	PRICE
W3TD-1	1 1/6" / 102	70½"	25½"	44"	115	$993
W3TD-3	2¾" / 45	70½"	25½"	44"	110	$968

Both models have 3 shelves.
W3TD-3 holds can also dome covers.

W3TD-3

P1224 and **P1230** are ribbed.

P1218 **P926**

BP-1

L815-G

BB5

PLATTERS PLASTIC CONSTRUCTION

MODEL	W	D	H	WT	PRICE*
HIGH-IMPACT STYRENE					
P926-W	9"	26"	1"	20/dz.	$230
P1030-W	10½"	30"	¾"	25/dz.	$303
P1218-W	12½"	18"	1"	18/dz.	$288
P1224-W	12½"	24"	¾"	24/dz.	$297
P1230-W	12½"	30"	¾"	33/dz.	$240
P1826-G	18"	26"	1"	40/dz.	$368
P1826-W	18"	26"	1"	40/dz.	$272
P1826-Y	18"	26"	1"	40/dz.	$368
ABS CRYOLAC					
D926-B	9"	26"	1"	20/dz.	$279
D1826-W	18"	26"	1"	40/dz.	$403

Reinforced front and side edges with safe-edged sanitary "finger-tip" grip design. Easy-to-clean surface. Fits all standard platter racks.
*Priced per dozen.

Tray Colors:
Green – G White – W
Yellow – Y Black – B

BUN PANS ALUMINUM CONSTRUCTION

MODEL	H	W	D	WT	PRICE*
BP-1	1"	18"	26"	42/dz.	$268

Rolled edge.
*Priced per dozen.

LUGS PLASTIC CONSTRUCTION

MODEL	H	W	D	WT	PRICE
L815-G	8½"	15¾"	23¾"	4	$33
L815-W	8½"	15¾"	23¾"	4	$33
L815C-G	Lug Cover – Gray				$41
L815C-W	Lug Cover – White				$41

Injection molded polyethylene.
Cross stackable and tapered for nesting.
Fits Channel Mfg. standard lug racks.

BUS BOX PLASTIC CONSTRUCTION

MODEL	H	W	D	WT	PRICE
BB5	7"	15½"	20¼"	2	$20

Accessories

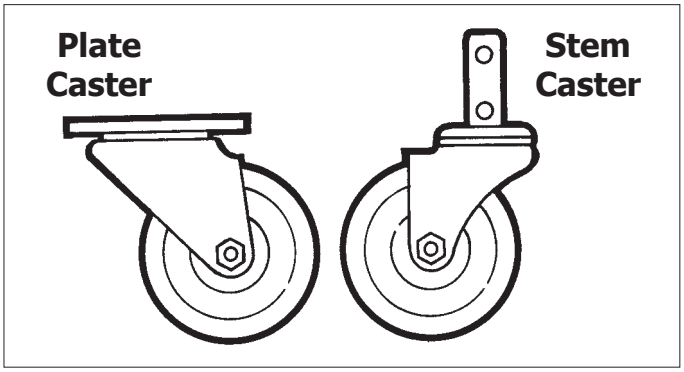

CASTER REPLACEMENTS

MODEL	MATERIAL	WHEEL	WT	PRICE
PLATE SWIVEL				
CPS14U	Polyurethane	4" x 1¼"	1.0	$30
CPS54H	High Temp	4" x 1½"	2.6	$42
CPS45U	Polyurethane	5" x 1¼"	2.0	$45
CPS25U	Polyurethane	5" x 2"	5.0	$60
STEM SQUARE				
CSS45O	Polypropylene	5" x 1¼"	1.6	$26
CSS45PU	Polyurethane	5" x 1¼"	1.6	$35
CSS45R	Rubber-Swivel	5" x 1¼"	2.8	$36
CSR45R	Rubber – Rigid	5" x 1¼"	2.8	$35
CSS55PU	Polyurethane	5" x 1½"	2.3	$46
/025KD	Polypropylene	5" x 1¼"	1.6	$26
STEM ROUND				
CIS45PU	Polypropylene	5" x 1¼"	2.5	$42

ELC-69

/022 & /024

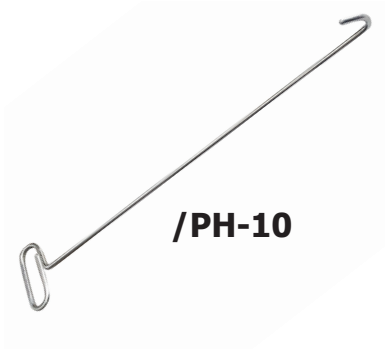

/PH-10

/AF

/PB

WHEEL REPLACEMENTS

MODEL	MATERIAL	WHEEL	WT	PRICE
W28U	Polyurethane	8" x 2"	4.0	$51
W48SP	Semi-Pneumatic	10" x 2¾"	9.0	$54

COVERS — BUN PAN RACKS

MODEL	MATERIAL	H	WT	PRICE
ELC-69	For Bun Pan Racks 68" – 72" high	60"	4	$61
ELC-65	For Bun Pan Racks 63" – 65" high	56"	3	$61
ELC-36	For Bun Pan Racks 36" high	30"	2	$49

Covers are standard with three zippers to accommodate both end load and side load bun pan racks.

/015
Pan Stop Web-Strap

Model 546A show with optional aluminum pan stop: **/009**

OPTIONAL ACCESSORIES

MODEL	DESCRIPTION	PRICE
/009	Pan Stop – Aluminum	$50
/010	Pan Stop – Stainless Steel	$66
/011	Caster Brakes	$32
/015	Pan Stop – Web-Strap	$59
/022	Corner Bumpers (set of 2)	$59
/024	Corner Bumpers (set of 4)	$106
/052	5" x 2" Heavy-Duty Caster Upgrade	$141
/5B	Heavy-Duty Caster Brakes	$48
/2W	Double Welded Runners	$185
/A	Solid Top – Aluminum	$230
/AF	Adjustable Feet (set of 4)	$63
/BA	Solid Bottom – Aluminum	$246
/BS	Solid Bottom – Stainless Steel	$300
/CC	Card Clip - Aluminum	$9
/FF	Flanged Feet (in lieu of casters)	$44
/H24	Dunnage Dolly Handle - Aluminum	$70
/P	Work Top – Poly	$252
/PB	Perimeter Bumper	$216
/PH-10	Pull Handle - Aluminum	$42
/PP	Prison Package	$36
/S	Work Top – Stainless Steel	$285
/SW	Seal Weld	$53
/VB	Vertical Bumpers (set of 4)	$193

MODEL #	PAGE #	PRICE
/009	1, 25 & 28	$50
/010	1, 25 & 28	$66
/011	1, 25 & 28	$32
/015	1, 25 & 28	$59
/022	1, 25 & 28	$59
/024	1, 25 & 28	$106
/052	1, 25 & 28	$141
/5B	1, 25 & 28	$48
/2W	1, 25 & 28	$185
/A	1, 25 & 28	$230
/ADJ4	13	$216
/AF	1, 25 & 28	$63
/BA	1, 25 & 28	$246
/B LIFT	5	$97
/BRAD	17	$33
/C LIFT	5	$97
/FF	1, 25 & 28	$44
/H24	1, 25 & 28	$70
/KS142	8	$76
/KS148	8	$79
/KS160	8	$82
/KS180	8	$101
/KS193	8	$161
/P	1, 25 & 28	$252
/PB	1, 25 & 28	$216
/PH	10	$72
/PH-10	1, 25 & 28	$42
/PHLA	18	$85
/PHLS	18	$137
/PHQM	22	$85
/PP	1, 25 & 28	$36
/S	1, 25 & 28	$285
/S1660S	16	$106
/VB	1, 25 & 28	$193
123B	15	$206
123C	15	$84
123FRAME	15	$314
123P	15	$862
399A	1	$1,036
400A	1	$939
400AC	1	$688
400AN-HD	4	$1,485
400A-OR	5	$1,070
400S	1	$1,796
400S-OR	5	$1,922
401A	1	$688
401AC	1	$475
401AKD	2	$251
401AN	4	$563
401AN-HD	4	$1,135
401A-OR	5	$803
401S	1	$1,277
401SN	4	$1,299
401S-OR	5	$1,591
402A	1	$685
402AKD	2	$344
402AN	4	$522
402AN-HD	4	$1,091
402A-OR	5	$785
402S	1	$1,288
402SN	4	$1,309
402S-OR	5	$1,398
403A	1	$628
403AKD	2	$343

MODEL #	PAGE #	PRICE
403AN	4	$474
403AN-HD	4	$1,031
403A-OR	5	$775
403S	1	$1,179
403SN	4	$1,200
403S-OR	5	$1,335
404A	1	$594
404AN	4	$436
404AN-HD	4	$993
404A-OR	5	$742
404S	1	$1,113
404SN	4	$1,135
404S-OR	5	$1,200
405A	1	$917
405AC	1	$676
405AN	4	$737
405AN-HD	4	$1,473
405S	1	$1,655
406A	1	$685
406AC	1	$458
406AKD	2	$342
406AN	4	$545
406AN-HD	4	$1,125
406S	1	$1,200
406SN	4	$1,222
410A	1	$939
410AC	1	$688
410A-DOR	5	$1,625
410A-OR	5	$1,070
410S	1	$1,796
410S-DOR	5	$2,926
410S-OR	5	$1,922
411A	1	$720
411AC	1	$534
411A-DOR	5	$1,324
411AKD	2	$342
411A-OR	5	$801
411S	1	$1,309
411S-DOR	5	$2,245
411S-OR	5	$1,582
412A	1	$685
412A-DOR	5	$1,200
412A-OR	5	$789
412S	1	$1,299
412S-DOR	5	$1,935
412S-OR	5	$1,407
413A	1	$617
413A-DOR	5	$1,125
413A-OR	5	$775
413S	1	$1,200
413S-DOR	5	$1,702
413S-OR	5	$1,274
414A	1	$595
414A-DOR	5	$1,031
414A-OR	5	$742
414S	1	$1,118
414S-DOR	5	$1,555
414S-OR	5	$1,200
415A	1	$916
415AC	1	$676
415S	1	$1,720
416A	1	$628
416AC	1	$512

MODEL #	PAGE #	PRICE
416S	1	$1,250
420A	25	$1,688
420A3	25	$1,267
420A6	25	$1,542
420S	25	$3,040
421A	25	$1,444
421A3	25	$1,080
421A6	25	$1,317
422A	25	$1,356
422A3	25	$1,012
422A6	25	$1,235
423A	25	$1,292
423A3	25	$972
423A6	25	$1,169
424A	25	$1,266
424A3	25	$949
424A6	25	$1,157
425A	6	$381
425AKD	2 & 6	$198
425AN	4	$425
425AN-HD	4	$868
425S	6	$688
425SN	4	$709
426A	6	$429
426AKD	2 & 6	$258
426AN	4	$424
426AN-HD	4	$827
426S	6	$674
426SN	4	$696
427A	6	$421
427S	6	$637
428A	6	$435
428S	6	$720
429A	6	$429
429S	6	$688
430A	6	$424
430S	6	$704
431A	6	$413
431S	6	$654
432A	6	$403
432S	6	$631
437A	24	$959
437A3	24	$720
437A6	24	$873
437S	24	$1,820
437S3	24	$1,548
437S6	24	$1,886
438A	24	$883
438A3	24	$663
438A6	24	$805
438S	24	$1,737
438S3	24	$1,302
438S6	24	$1,588
439A	24	$783
439A3	24	$585
439A6	24	$716
439S	24	$1,545
439S3	24	$1,152
439S6	24	$1,404
440A	24	$760
440A3	24	$570
440A6	24	$698
440S	24	$1,432

MODEL #	PAGE #	PRICE
440S3	24	$1,079
440S6	24	$1,309
445A	24	$970
445A3	24	$728
445A6	24	$916
445S	24	$2,087
445S3	24	$1,567
445S6	24	$1,908
446A	24	$886
446A3	24	$666
446A6	24	$813
446S	24	$1,765
446S3	24	$1,324
446S6	24	$1,614
447A	24	$783
447A3	24	$607
447A6	24	$728
447S	24	$1,558
447S3	24	$1,277
447S6	24	$1,424
448A	24	$750
448A3	24	$563
448A6	24	$685
448S	24	$1,456
448S3	24	$1,214
448S6	24	$1,331
457A	25	$1,571
457A3	25	$1,192
457A6	25	$1,450
458A	25	$1,430
458A3	25	$1,072
458A6	25	$1,361
459A	25	$1,364
459A3	25	$1,027
459A6	25	$1,316
460A	25	$1,310
460A3	25	$980
460A6	25	$1,262
465A	25	$1,572
465A3	25	$1,192
465A6	25	$1,430
466A	25	$1,434
466A3	25	$1,079
466A6	25	$1,361
467A	25	$1,372
467A3	25	$1,032
467A6	25	$1,259
468A	25	$1,306
468A3	25	$982
468A6	25	$1,195
484DD	21	$454
485DD	21	$1,305
486DD	21	$1,414
501LA	18	$159
501LS	18	$316
502LA	18	$213
502LS	18	$403
503LA	18	$268
503LS	18	$490
504LA	18	$322
504LS	18	$579
506LA	18	$377
506LS	18	$763

PRICES

MODEL #	PAGE #	PRICE
512LA	18	$688
512LS	18	$1,456
516AP	19	$415
516AP3	19	$312
516AP6	19	$389
516SP	19	$818
516SP3	19	$633
516SP6	19	$807
517AP	19	$389
517AP3	19	$291
517AP6	19	$381
517SP	19	$742
517SP3	19	$557
517SP6	19	$731
518AP	19	$413
518AP3	19	$312
518AP6	19	$400
518SP	19	$840
518SP3	19	$633
518SP6	19	$830
519AP	19	$400
519AP3	19	$302
519AP6	19	$389
519SP	19	$747
519SP3	19	$562
519SP6	19	$735
520AP	19	$424
520AP3	19	$319
520AP6	19	$407
520SP	19	$895
520SP3	19	$673
520SP6	19	$885
521AP	19	$397
521AP3	19	$300
521AP6	19	$364
521SP	19	$864
521SP3	19	$617
521SP6	19	$830
522AP	19	$352
522SP	19	$616
523AP	19	$352
523SP	19	$639
524AP	19	$373
524SP	19	$639
53C	4	$1,214
546A	21	$545
547A	21	$522
548A	21	$533
549A	21	$511
550A	21	$579
551A	21	$557
552A	21	$567
553A	21	$545
560N	2	$776
560NS	2	$1,274
564N	2	$663
564NS	2	$1,020
565/P	6	$1,200
566N	2	$763
566NS	2	$1,157
567/P	6	$773
568	10	$1,395
569	10	$1,485
56C	4	$1,153
570AC	3	$757
570AC6	3	$688

MODEL #	PAGE #	PRICE
571AC	3	$783
571AC6	3	$717
600	15	$563
615	4	$753
616	4	$1,135
620	4	$1,179
6ABC	15	$654
6SBC	15	$982
8ABC	15	$728
8SBC	15	$1,070
AD2428	23	$436
AD2433	23	$457
AD2440	23	$485
ADE2024	11	$118
ADE2024KD	11	$125
ADE2036	11	$123
ADE2036KD	11	$133
ADE2042	11	$126
ADE2048	11	$128
ADE2048KD	11	$144
ADE2054	11	$130
ADE2060	11	$132
ADE2424	11	$120
ADE2436	11	$127
ADE2442	11	$131
ADE2448	11	$139
ADE2454	11	$142
ADE2460	11	$147
ADR2024	11	$106
ADR2036	11	$119
ADR2042	11	$128
ADR2048	11	$130
ADR2054	11	$141
ADR2060	11	$143
ASAU72	13	$139
ATDR-3	22	$3,241
ATDR-4	22	$3,241
AUR-12	21	$1,247
AUR-13	21	$1,290
AUR-6	21	$901
AURA	21	$72
AWM-10	8	$352
AWM-5	8	$279
AWM-6	8	$276
AWS1224	10	$104
AWS1236	10	$116
AWS1248	10	$126
AXD1808	3	$1,015
AXD1810	3	$1,125
AXD1812	3	$1,171
AXD1815	3	$1,262
AXD1818	3	$1309
AXD1820	3	$1,338
AXD1825	3 & 6	$849
AXD1830	3	$1,572
AXD2808	3	$1,015
AXD2810	3	$1,125
AXD2812	3	$1,171
AXD2815	3	$1,262
AXD2818	3	$1,309
AXD2820	3	$1,338
AXD2825	3	$849
AXD2830	3	$1,572
AXD501L	18	$349
AXD502L	18	$509

MODEL #	PAGE #	PRICE
AXD503L	18	$653
AXD504L	18	$688
AXD506L	18	$797
AXD512L	18	$1,398
AXD516P	19	$906
AXD516P3	19	$685
AXD516P6	19	$830
AXD517P	19	$840
AXD517P3	19	$633
AXD517P6	19	$763
AXD518P	19	$895
AXD518P3	19	$676
AXD518P6	19	$825
AXD519P	19	$860
AXD519P3	19	$642
AXD519P6	19	$838
AXD520P	19	$925
AXD520P3	19	$696
AXD520P6	19	$849
AXD521P	19	$870
AXD521P3	19	$652
AXD521P6	19	$795
AXD522P	19	$763
AXD523P	19	$773
AXD524P	19	$816
AXD570	3	$1,275
AXD5703	3	$947
AXD5706	3	$1,234
AXDULR3	18	$890
AXDULR6	18	$1,236
AXDUPR5	19	$1,168
AXDUPR7	19	$1,200
AXDUPR8	19	$1,309
AXDUSR7	18	$1,834
AXD-UTR-10	20	$1,407
AXD-UTR-11	20	$1,429
AXD-UTR-12	20	$1,440
AXD-UTR-15	20	$1,484
AXD-UTR-18	20	$1,494
AXD-UTR-20	20	$1,516
AXD-UTR-5	20	$1,189
AXD-UTR-9	20	$1,359
BA2036	13	$143
BA2042	13	$153
BA2048	13	$164
BA2054	13	$175
BA2060	13	$186
BA2436	13	$160
BA2442	13	$171
BA2448	13	$182
BA2454	13	$193
BA2460	13	$204
BB5	14, 27	$20
BBC-3	14	$315
BBC-6	14	$447
BBT-2	22	$1,044
BBT-3620-2	22	$922
BBT-4220-2	22	$946
BBT-4820-2	22	$1,015
BBT-5420-2	22	$1,036
BBT-6020-2	22	$1,070
BC2036	13	$159
BC2042	13	$170
BC2048	13	$181
BC2054	13	$191

MODEL #	PAGE #	PRICE
BC2060	13	$203
BC2436	13	$174
BC2442	13	$185
BC2448	13	$196
BC2454	13	$207
BC2460	13	$217
BP-1	27	$268
BPD	23	$217
BPRE-5/P	6	$654
BPRE-6/P	6	$676
BPT-2	23	$360
BPT-2TP	23	$432
BS3	17	$125
BS4	17	$144
BS5	17	$158
BS6	17	$177
BTA48	17	$361
BTA60	17	$410
BTA72	17	$491
BWA36	17	$290
BWA48	17	$307
BWA60	17	$322
BWA72	17	$421
CA2024	11	$180
CA2036	11	$190
CA2042	11	$198
CA2048	11	$207
CA2054	11	$217
CA2060	11	$229
CA2072	11	$284
CA2424	11	$207
CA2436	11	$217
CA2442	11	$231
CA2448	11	$243
CA2454	11	$256
CA2460	11	$269
CA2472	11	$344
CIS45PU	28	$42
COS348	26	$1,573
CPS14U	28	$30
CPS25U	28	$60
CPS45U	28	$45
CPS54H	28	$42
CSBR-80	9	$993
CSBR-80M	9	$1,192
CSH36	13	$50
CSH42	13	$53
CSH48	13	$55
CSH54	13	$58
CSH60	13	$60
CSR-156	9	$2,912
CSR-156M	9	$3,384
CSR-3	9	$840
CSR-3M	9	$946
CSR-3MP	9	$922
CSR-3MS	9	$1,091
CSR-44M	9	$1,113
CSR45R	28	$35
CSR-4M	9	$873
CSR-4MP	9	$1,058
CSR-4MS	9	$1,146
CSR-9	9	$922
CSR-99	9	$1,157
CSR-9M	9	$1,168

MODEL #	PAGE #	PRICE
CSR-99M	9	$1,386
CSR-M	9	$216
CSS45O	28	$26
CSS45PU	28	$35
CSS45R	28	$36
CSS55PU	28	$46
CSU-TT2036-4-KIT	13	$1,042
CSU-TT2048-4-KIT	13	$1,130
CSU-TT2060-4-KIT	13	$1,278
CSU-TT2442-4-KIT	13	$1,136
CSU-TT2448-4-KIT	13	$1,184
CSURC	13	$575
CSURL	13	$216
CSURR	13	$216
CT248	17	$1,146
CT260	17	$1,299
CT272	17	$1,489
CT348	17	$1,265
CT360	17	$1,419
CT372	17	$1,742
CTR1418	24	$1,525
CTR14186	24	$1,492
CTR1520	24	$1,528
CTR15206	24	$1,495
D1826-W	27	$403
D926-B	27	$279
DR2036-2	12	$415
DR2036-3	12	$557
DR2036-4	12	$698
DR2042-2	12	$432
DR2042-3	12	$589
DR2042-4	12	$742
DR2048-2	12	$447
DR2048-3	12	$611
DR2048-4	12	$777
DR2054-2	12	$463
DR2054-3	12	$650
DR2054-4	12	$814
DR2060-2	12	$481
DR2060-3	12	$688
DR2060-4	12	$852
DR2072-2	12	$589
DR2072-3	12	$818
DR2072-4	12	$961
DR2436-2	12	$475
DR2436-3	12	$650
DR2436-4	12	$836
DR2442-2	12	$498
DR2442-3	12	$666
DR2442-4	12	$862
DR2448-2	12	$524
DR2448-3	12	$698
DR2448-4	12	$906
DR2454-2	12	$545
DR2454-3	12	$720
DR2454-4	12	$949
DR2460-2	12	$584
DR2460-3	12	$797
DR2460-4	12	$995
DR2472-2	12	$688
DR2472-3	12	$961
DR2472-4	12	$1,125
DS2410/P	6	$1,181
DS2414/P	6	$1,212
EC2036	13	$149
EC2042	13	$153

MODEL #	PAGE #	PRICE
EC2048	13	$163
EC2054	13	$173
EC2060	13	$184
EC2436	13	$180
EC2442	13	$190
EC2448	13	$202
EC2454	13	$212
EC2460	13	$224
ECC2036	13	$170
ECC2042	13	$181
ECC2048	13	$191
ECC2054	13	$203
ECC2060	13	$213
ECC2436	13	$184
ECC2442	13	$195
ECC2448	13	$216
ECC2454	13	$228
ECC2460	13	$238
ED2024	11	$191
ED2036	11	$203
ED2036-2	12	$381
ED2036-3	12	$509
ED2036-4	12	$633
ED2042	11	$216
ED2042-2	12	$393
ED2042-3	12	$524
ED2042-4	12	$654
ED2048	11	$229
ED2048-2	12	$403
ED2048-3	12	$545
ED2048-4	12	$698
ED2054	11	$239
ED2054-2	12	$424
ED2054-3	12	$573
ED2054-4	12	$728
ED2060	11	$251
ED2060-2	12	$436
ED2060-3	12	$589
ED2060-4	12	$763
ED2072	11	$327
ED2424	11	$205
ED2436	11	$216
ED2436-2	12	$434
ED2436-3	12	$589
ED2436-4	12	$753
ED2442	11	$228
ED2442-2	12	$456
ED2442-3	12	$611
ED2442-4	12	$797
ED2448	11	$239
ED2448-2	12	$478
ED2448-3	12	$639
ED2448-4	12	$837
ED2454	11	$251
ED2454-2	12	$502
ED2454-3	12	$654
ED2454-4	12	$873
ED2460	11	$261
ED2460-2	12	$529
ED2460-3	12	$695
ED2460-4	12	$911
ED2472	11	$327
ELC-36	28	$49
ELC-65	28	$61
ELC-69	28	$61
ES2024	11	$447

MODEL #	PAGE #	PRICE
ES2036	11	$469
ES2042	11	$509
ES2048	11	$557
ES2054	11	$600
ES2060	11	$651
ES2072	11	$709
ETPR-3E	20	$671
ETPR-3E3	20	$545
ETPR-3E6	20	$643
ETPR-3S	20	$741
ETPR-3S3	20	$607
ETPR-3S6	20	$721
ETPR-5E	20	$617
ETPR-5E3	20	$490
ETPR-5E6	20	$589
ETPR-5S	20	$676
ETPR-5S3	20	$545
ETPR-5S6	20	$654
EXD2036	11	$300
EXD2042	11	$306
EXD2048	11	$316
EXD2054	11	$327
EXD2060	11	$332
EXD2436	11	$327
EXD2442	11	$332
EXD2448	11	$340
EXD2454	11	$349
EXD2460	11	$353
FBR-18	14	$622
FBR-27	14	$742
FTDR-3	22	$3,384
FTDR-3/PP	22	$3,420
FTDR-4	22	$3,384
FTDR-4/PP	22	$3,420
GRD	23	$226
GRD2	23	$364
GRR-6	26	$545
GRR-63	26	$410
GRR-8	26	$498
GRR-83	26	$377
HD2024	11	$213
HD2036	11	$226
HD2042	11	$237
HD2048	11	$250
HD2054	11	$261
HD2060	11	$276
HD2072	11	$391
HD2424	11	$227
HD2436	11	$237
HD2442	11	$251
HD2448	11	$263
HD2454	11	$277
HD2460	11	$292
HD2472	11	$403
HDKD20	2	$344
HT307	8	$342
HT307N	8	$371
HT315	8	$454
HT315N	8	$480
KAR42	8	$775
KAR48	8	$840
KAR60	8	$949
KAR80	8	$1,004
KAR93	8	$1,262
KARPOLE68	8	$139
KDA17	8	$206

MODEL #	PAGE #	PRICE
KDR136	8	$216
KDR148	8	$228
KSR48	8	$763
KSR72	8	$939
L814	15	$210
L814C	15	$102
L815-G	27	$33
L815-W	27	$33
L815C-G	27	$41
L815C-W	27	$41
LHSSS	17	$99
LPNB-10	4	$475
LPNB-12	4	$507
LPNB-15	4	$540
LPNB-18	4	$567
LPNB-20	4	$572
LPNS-11	20	$540
LPNS-15	20	$572
LPNS-19	20	$59
MC1313	23	$226
MC1319	23	$236
MC1326	23	$249
MC1338	23	$259
MC2472-2	26	$2,182
MC2472-3	26	$2,599
MC2472-4	26	$3,000
MD2024	23	$429
MD2036	23	$442
MD2042	23	$449
MD2048	23	$458
MD2054	23	$469
MD2060	23	$480
MD2424	23	$435
MD2436	23	$446
MD2442	23	$453
MD2448	23	$463
MD2454	23	$475
MD2460	23	$487
MW245/P	6	$1,214
MW247/P	6	$1,238
MWS1824	10	$327
MWS2424	10	$393
OT-6	26	$752
OT-63	26	$566
OT-6D	26	$1,419
OT-8	26	$728
OT-83	26	$531
OT-8D	26	$1,386
P1030-W	27	$303
P1218-W	27	$288
P1224-W	27	$297
P1230-W	27	$240
P1826-G	27	$368
P1826-W	27	$272
P1826-Y	27	$368
P926-W	27	$230
PB1826-3	14	$30
PBA001	15	$407
PBA405A	15	$654
PBA406	15	$469
PBA415	15	$633
PBA707	15	$512
PBA708	15	$534
PBC	14	$23
PBD	14 & 23	$226

PRICES

MODEL #	PAGE #	PRICE
PCR7	17	$544
PCR7M	17	$699
PLHS	17	$66
PR-11	14	$692
PR-12	14	$717
PR-15W	14	$65
PR-24	14	$1,335
PR-26	14	$837
PR-52	14	$1,561
PT2448	16	$563
PT3060	16	$654
QMA2860-3	22	$2,249
QMA2860-4	22	$2,328
QMA2860-5	22	$2,393
QMA2860-6	22	$2,570
RB-4	14	$654
RB-46	14	$588
RB47A	14	$579
RB-5	14	$643
RG101	6	$1,004
RG102	6	$906
RHTDP8	16	$206
RIR-10	7	$393
RIR-10KD	7	$393
RIR-10S	7	$688
RIR-16	7	$480
RIR-16KD	7	$480
RIR-16S	7	$818
RIR-24	7	$572
RIR-24KD	7	$572
RIR-24S	7	$938
RIR-7	7	$342
RIR-7KD	7	$342
RIR-7S	7	$559
RIUTR-10	7	$654
RIUTR-16	7	$698
RIUTR-4	7	$524
RIUTR-7	7	$563
RIW-13	7	$342
RIW-13S	7	$490
RIW-29	7	$545
RIW-29S	7	$698
SA2036	13	$135
SA2042	13	$145
SA2048	13	$152
SA2054	13	$163
SA2060	13	$182
SA2436	13	$150
SA2442	13	$159
SA2448	13	$167
SA2454	13	$175
SA2460	13	$190
SC2036	13	$172
SC2042	13	$183
SC2048	13	$194
SC2054	13	$205
SC2060	13	$215
SC2436	13	$185
SC2442	13	$196
SC2448	13	$207
SC2454	13	$217
SC2460	13	$239
SDDC-4832	17	per qty.
SDDF-3670	17	per qty.
SL6	15	$269
SL8	15	$420

MODEL #	PAGE #	PRICE
SM-4	18	$815
SORT-4	18	$1,353
SPCD-A	23	$381
SPCD-S	23	$600
SRS-11	18	$576
SRS-7	18	$521
SSPR-3E	20	$1,135
SSPR-3E3	20	$873
SSPR-3E6	20	$1,091
SSPR-3S	20	$1,214
SSPR-3S3	20	$917
SSPR-3S6	20	$1,157
SSPR-5E	20	$1,058
SSPR-5E3	20	$852
SSPR-5E6	20	$970
SSPR-5S	20	$1,004
SSPR-5S3	20	$873
SSPR-5S6	20	$981
STK18404	16	$490
STK18404A	16	$490
STK18406	16	$534
STK18406A	16	$534
STKC200	16	$480
STKC200G	16	$557
STKC500	16	$306
STKG100	16	$458
STKG100H	16	$480
STKG300	16	$545
STKG300H	16	$611
STKG400	16	$589
STKG400H	16	$611
STPR-3	20	$1,589
STPR-33	20	$1,298
STPR-36	20	$1,512
STPR-5	20	$1,200
STPR-53	20	$927
STPR-56	20	$1,275
STPR-8	20	$982
STPR-83	20	$654
STPR-86	20	$905
SWS1224	10	$170
SWS1236	10	$174
SWS1248	10	$206
SWS1260	10	$237
T437A	24	$1,262
T437A3	24	$1,044
T437A6	24	$1,196
T438A	24	$1,049
T438A3	24	$831
T438A6	24	$983
T439A	24	$926
T439A3	24	$708
T439A6	24	$883
T440A	24	$849
T440A3	24	$631
T440A6	24	$805
T445A	24	$1,250
T445A3	24	$1,050
T445A6	24	$1,203
T446A	24	$1,031
T446A3	24	$813
T446A6	24	$966
T447A	24	$942
T447A3	24	$723
T447A6	24	$877
T448A	24	$854

MODEL #	PAGE #	PRICE
T448A3	24	$635
T448A6	24	$757
TA2036	13	$123
TA2042	13	$129
TA2048	13	$137
TA2054	13	$148
TA2060	13	$159
TA2436	13	$141
TA2442	13	$146
TA2448	13	$151
TA2454	17	$160
TA2460	13	$173
TCA-5	17	$209
TDC2937A-2	22	$1,214
TDC2937A-3	22	$1,528
TDC2953A-2	22	$1,456
TDC2953A-3	22	$1,758
TDRS-3	22	$851
TDRS-4	22	$851
TT2036	13	$140
TT2042	13	$150
TT2048	13	$161
TT2054	13	$172
TT2060	13	$183
TT2436	13	$152
TT2442	13	$163
TT2448	13	$174
TT2454	13	$185
TT2460	13	$196
TT307	8	$313
TWS1224	10	$137
TWS1236	10	$170
TWS1248	10	$229
TWS1248/PH	10	$291
TWS1260	10	$217
TWS1836	10	$229
TWS1848	10	$246
TWS1860	10	$268
U1648DS	16	$390
U1660DS	16	$429
ULR3	18	$425
ULR6	18	$573
UPR5	19	$540
UPR7	19	$557
UPR8	19	$607
UR-10	21	$1,238
UR-11	21	$1,214
UR-111/S	21	$1,250
UR-12	21	$1,277
UR-13	21	$1,309
UR-5	21	$981
US1524-3	22	$403
US1827-3	22	$453
US2135-3	22	$773
USR7	18	$816
UTR-10	20	$775
UTR-11	20	$785
UTR-12	20	$797
UTR-15	20	$818
UTR-18	20	$830
UTR-20	20	$840
UTR-5	20	$639
UTR-9	20	$753
W28U	28	$51
W3TD-1	26	$993

MODEL #	PAGE #	PRICE
W3TD-3	26	$968
WA02	2	$917
WA03	2	$685
WA04	2	$673
WA05	2	$633
WDS1410	18	$40
WPC2539	17	$728
WS02	2	$1,655
WS03	2	$1,200
WS04	2	$1,236
WS05	2	$1,146
WSS-1152	10	$1,595
XBPT-1	23	$709
XBPT-1AB	23	$1,245
XBPT-2	23	$816

TERMS & CONDITIONS - WARRANTY

GENERAL INFORMATION

- Terms and Conditions supersede all previous Terms and Conditions and are incorporated into any quotation, purchase order or invoice supplied to customer (Customer) and apply to any and all ñgoods and materialsò (Goods) sold or provided by Channel Manufacturing (Channel).
- All prices are shown and shall be paid by Customer in U.S. Dollars. Customer shall pay Channel as set forth in Channelís invoice.
- All prices, specifications and discounts are subject to change without notice. Channel reserves the right to make changes to Goods in, but not limited to, design or material when deemed necessary.
- All Goods are priced and shipped F.O.B. Channelís respective factory (Port Washington, NY or Medley, FL) and all freight and shipping charges are the responsibility of and shall be paid by Customer. Manner of shipping and routing of shipments is at the discretion of Channel, unless directed otherwise in writing by Customer and agreed to in writing by Channel.
- Purchase orders may be sent to Channel via either of the following means:
  - Emailed (preferred) to: orders@channelmfg.com
  - Faxed to: (516) 944-0625
  - Mailed to: Channel Manufacturing

    55 Channel Drive
    Port Washington, NY 11050 USA
- All orders are contingent upon Channelís acceptance.
- Channel's prices are exclusive of Federal Excise, Municipal, Usage or any and all other taxes. Customer shall have the sole responsibility for payment of all such taxes with respect to the purchase of any Goods. If the sale of Goods is subject to state sales tax, or other charge, Customer shall pay such tax or charge upon the request of Channel. If Customer is a tax-exempt entity, Customer shall present all appropriate documentation for any tax exemption to Channel prior to placing its order.
- Payment Terms: Customer shall pay all invoices in U.S. Dollars within thirty (30) days from the date of Channelís invoice, unless otherwise specified on the invoice.
- Channel will ship via requested carrier when possible, otherwise a carrier of Channelís choice will be selected. Freight charges, including but not limited to, freight charge differences, waiting fees, accessorial fees (lift gate, lumper, special handling, etc.) are the responsibility of Customer.
- Goods ship from Channelís factory in first class condition. Title to the Goods and any risk of loss associated with the Goods shall pass to Customer at the time of delivery of the Goods to the carrier for shipment to Customer. In the event Customer or its agent or representative picks up the Goods at Channel's factory or Channel delivers the Goods, title and risk of loss pass to Customer at the time of pick up by Customer, its agent or representative or shipment by Channel. With regard to Goods that are returned to Channel, title and risk of loss remains with Customer until receipt and acceptance of the Goods by Channel. All claims for damage and shortage in transit shall be made by Customer with the carrier, and Customer holds Channel harmless for all such claims.
- All orders are shipped Prepaid and Add unless otherwise specified and approved by Channel.
- All weights listed are approximate.
- Minimum charge for any single transaction is $25.00 Net, exclusive of freight or accessorial charges.
- No part of this catalog may be reproduced in any manner without written permission from Channel.
- Customer assumes all responsibilities, risks and liabilities, including but not limited to, determining the use, application, suitability and proper installation of Goods.
- Force Majeure**.** Channel will be excused from any delay or failure in its performance of its obligations where the delay or failure is due, in whole or in part, directly or indirectly, to a cause beyond Channel's reasonable control including, without limitation, labor difficulties, riots, fire, weather, casualty, accidents, acts of God, acts of terrorism, civil disorder, war, shortage of labor or materials or governmental acts or restrictions. Upon any of the above events, Channel will have the additional right to extend the time to provide the Goods or to cancel any open purchase orders without any resulting liability to Channel.

RETURNS

- Only "stock" Goods in new and unused condition will be considered for return. Stainless steel, custom-manufactured and low volume Goods will NOT be accepted and are NOT eligible for return.
- To return Goods, Customer must contact Channel within thirty (30) days of the date on Channelís invoice to request a Return Authorization (RA) number and provide photos per Channelís direction. No returns will be accepted without an RA number.
- All Goods, if accepted for return, will be subject to a minimum twenty-five percent (25%) or $50.00 restocking charge, whichever is greater. Channel has sole discretion to determine, after examination, whether returned Goods are defective or eligible for return. Customer's sole remedy for returned Goods that have been found to be defective or eligible for return shall be either, in Channel's sole discretion: (a) replacement of the returned Goods; or (b) reimbursement via credit memo of the amount paid by Customer for the returned Goods, subject to the restocking fee.
- All freight or express charges are the express responsibility of the Customer and must be prepaid.
- All Goods must be properly packed to prevent damage in transit. The RA number must be clearly written and visible on all cartons, or if palletized, on two (2) adjacent sides of the packaging of each pallet.

CREDIT & COLLECTION

- No Goods will be shipped to any Customer that is not in good standing with Channel.
- If Channel finds it is necessary to turn a Customer over to collections, all charges incurred by Channel in doing so will be the responsibility of the Customer.

WARRANTY

- Channel warrants to the original purchaser of a piece of new Channel equipment, the equipment thereof, to be free from manufacturerís defects in materials or workmanship, under normal and proper use in a traditional food service application, and upon proper installation and maintenance, for a period of:
  - Economy Series ï One (1) year from date of Channelís invoice.
  - Standard Series ï Five (5) years from date of Channelís invoice.
  - LifeTime Tough Series ï limited lifetime from date of Channelís invoice.
- All warranty claims must be made directly through Channel. All claims must include: model number, proof of purchase of the equipment, photos of items and any applicable information supporting the existence of an alleged defect.
- Channelís sole obligation under this warranty is limited to, at the sole discretion of Channel, either repair or replacement, subject to the additional limitations below:
- Warranty does not cover casters and standard wear parts.
- Warranty does not cover freight charges.
- Warranty does not cover profit loss, food loss, economic loss, or any special, direct, indirect, consequential or inconsequential damages.
- Any changes or alterations of original equipment or parts voids warranty.
- Warranty does not apply to occurrences due to neglect or abuse of equipment and / or improper installation and maintenance, as determined by Channel. The Channel product must not be loaded beyond the product's published capacity.
- Channel warrants that the aluminum products listed in their most recent price list catalog (casters and other fastening devices excluded) will not rust for the period of time the original purchaser owns it, provided the products are used within the following guidelines; (a) the Channel product must be used in a traditional food service application (b) the Channel product must be cleaned and properly maintained on a regular / periodic basis (every 3 to 4 weeks) following recommended industry standards, using an appropriate cleaning agent, in accordance with the instructions for use printed on the cleaning agentís label.
- Claims must be sent to: sales@channelmfg.com or to Channel Mfg. - 55 Channel Dr. - Port Washington, NY 11050. If requested, the damaged product will be returned to the above address at the owner's expense for inspection and approval.
- This warranty does not apply to, and Channel is not responsible for, any warranty claims for products sold, installed, or used outside the United States.

01/2021

CHANNEL®

Port Washington, NY 11050
Medley, FL 33178

Tel: 866-712-7283 • Fax: 516-944-0625
channelmfg.com • sales@channelmfg.com

2021 Product Reference Guide & Price List

EFFECTIVE APRIL 1, 2021

MADE IN THE USA

Pricelist 0421